NORDOCK®

AN **INTEGRATED WAREHOUSE SOLUTIONS** BRAND



PARTS CATALOG 2023

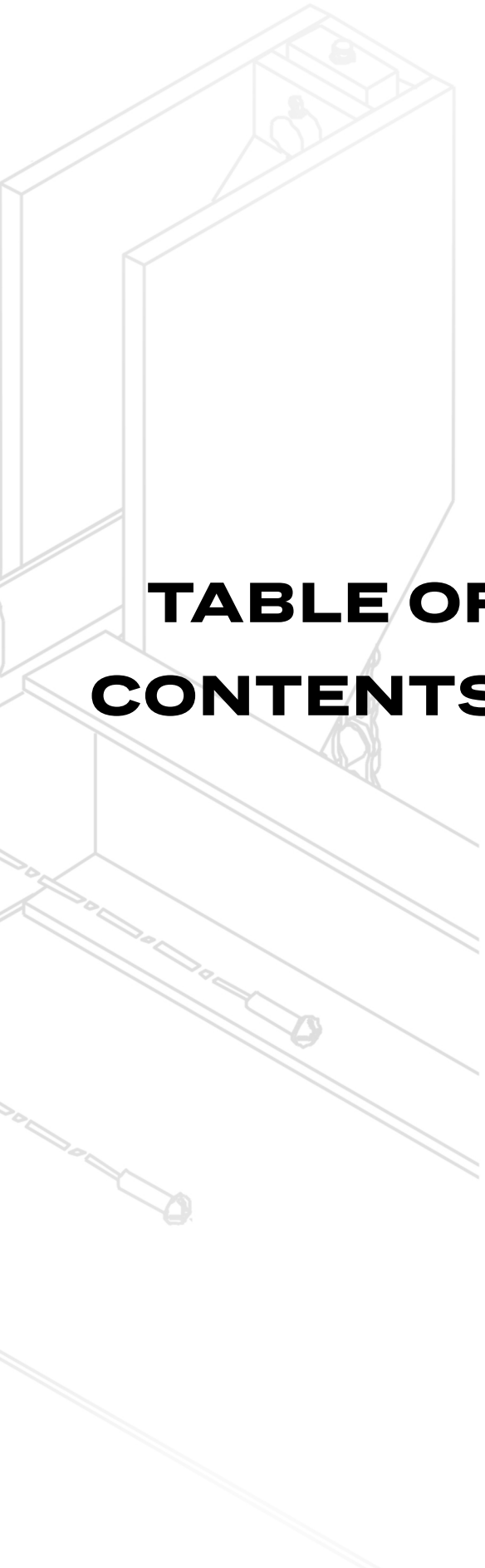

TABLE OF CONTENTS

MECHANICAL DOCK LEVELERS

CONSTRUCTOR™ (CM) 4-11

INDUSTRIAL™ (NM) 12-19

HYDRAULIC DOCK LEVELERS

HEAVY-DUTY™ (NH) 20-27

SUPER-DUTY™ (SD) 28-38

DUAL-DUTY™ (ND) 39-48

CONSTRUCTOR™ (CH) 49-58

FALL-SAFE™ (SBL) 59-66

BARRIER™ (NB) 67-75

FLEX-LIP® (SHF) 76-85

FLEX-LIP® (SHLF) 86-93

VERTICAL STORING (NV) 94-97

AIR-POWERED DOCK LEVELERS

AIRDOCK® CONSTRUCTOR™ (CA) 98-106

AIRDOCK® INDUSTRIAL™ (AD) 107-116

FLEX-LIP® AIRDOCK® (ADF) 117-126

EDGE & SURFACE MOUNTED LEVELERS

EZ-DOCK™ (SMD) 127-131

LEVER™ (EM) 132-137

PUSH-BUTTON™ (EH) 138-144

PUSH-BUTTON™ (EFH) 145-152

TELESCOPING-LIP DOCK LEVELERS

VERTICAL STORING TELESCOPING-LIP™ (NVTL) 153-159

ROTATING HOOK IMPACT STYLE VEHICLE RESTRAINTS

SMART-HOOK® (AR-10K) 160-163
SMART-HOOK® (AR-20K) 164-167

NON IMPACT STYLE (MANUAL) VEHICLE RESTRAINTS

TRUCK-LOCK® (MTL-100) 168-171
TRUCK-LOCK® (MTL-200) 172-175
TRUCK-LOCK® (MTL-250) 176-179
TRUCK-LOCK® (MTL-300) 180-183

NON IMPACT STYLE (AUTOMATIC) VEHICLE RESTRAINTS

TRUCK-LOCK® (ATL-400) 184-187
TRUCK-LOCK® (ATL-450) 188-191
TRUCK-LOCK® (ATL-500) 192-195
TRUCK-LOCK® (ATL-900) 196-199

WHEEL RESTRAINTS

SHUR-LOK™ (SL-7000) 200-209
DOK-CHOCK™ (DC-300) 210-213

LIFTS & SPECIALTY

HYDRAULIC MAST-GUIDE™ Lift Model (MG) 214-216

SAFETY PRODUCTS

SAFETY GATE FALL-STOP™ BARRIER (ASG) 217-219

NORDOCK®

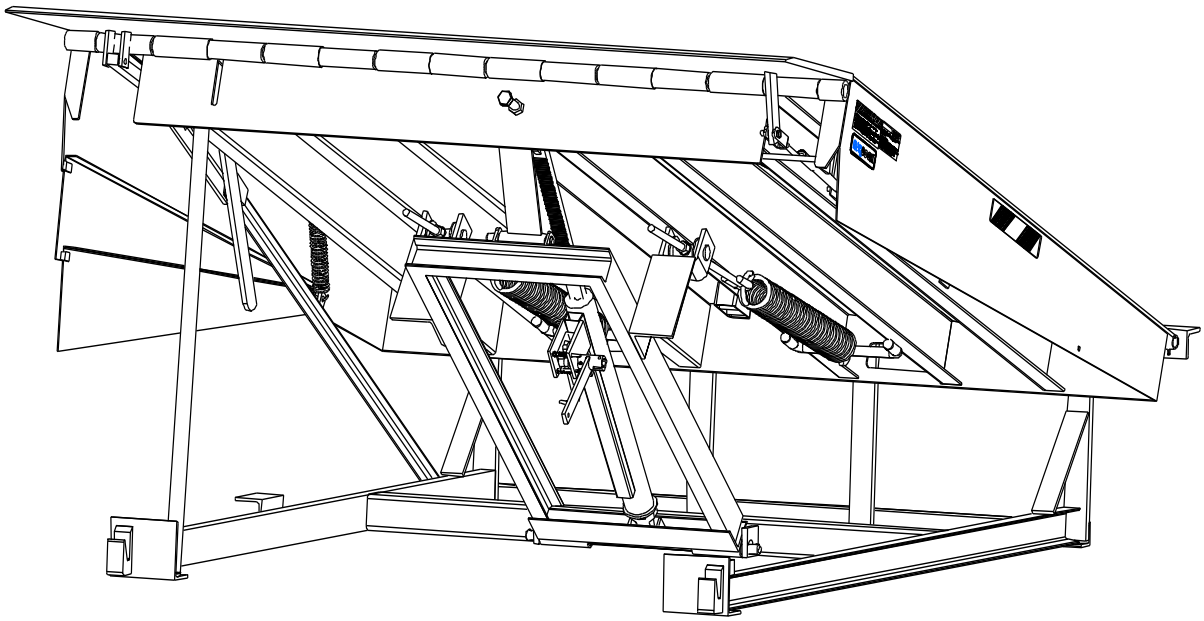

Mechanical Dock Leveler
CONSTRUCTOR™ Series
Model (CM)

30,000 to 45,000 lbs. Capacity

Parts Manual

This manual applies to CM series dock levelers manufactured on or after February 2020, with Serial Number(s) 49193 and greater.

P/N: 49-0110-X

NORDOCK INC.

Website: nordockinc.com ~ Email: sales@nordockinc.com ~ Toll free: 866-885-4276

Nordock Incorporated reserves the right to make changes to specifications without notice or obligation. Nordock products may be covered by various U.S. and foreign patents or pending applications.

Parts and Service Tables

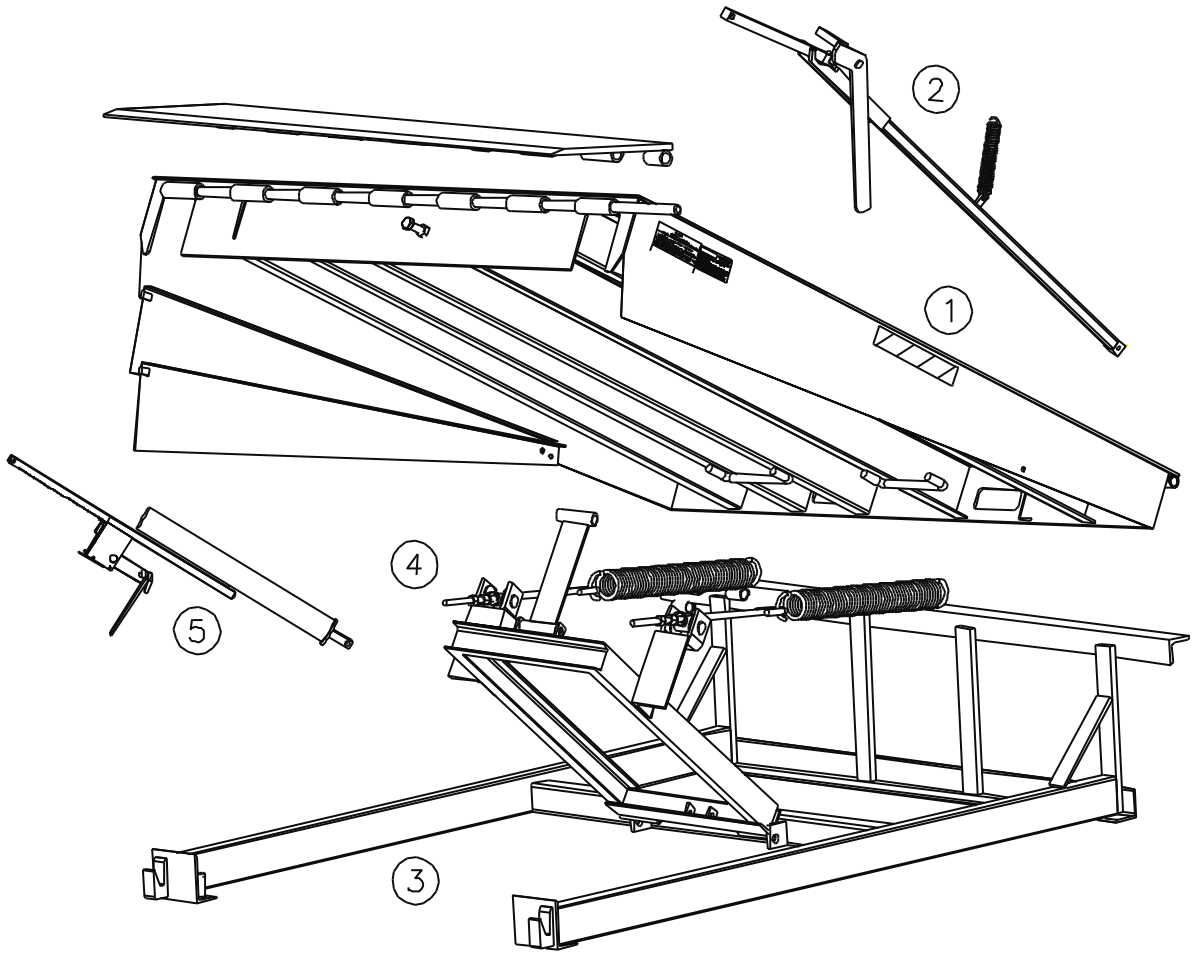

Section #	Description
1	Deck and Lip Assembly
2	Lip Extend Assembly
3	Frame Assembly
4	Deck Lift Arm and Float Assembly
5	Hold Down Assembly

Note: Not all parts and weldments are noted in this manual. Only those that are serviceable and/or replaceable will be listed. For additional information on those parts not included in this manual, please contact Nordock. Remember to make note of the model and serial number of the unit for accurate parts and service.

Section 1 – Deck and Lip Assembly

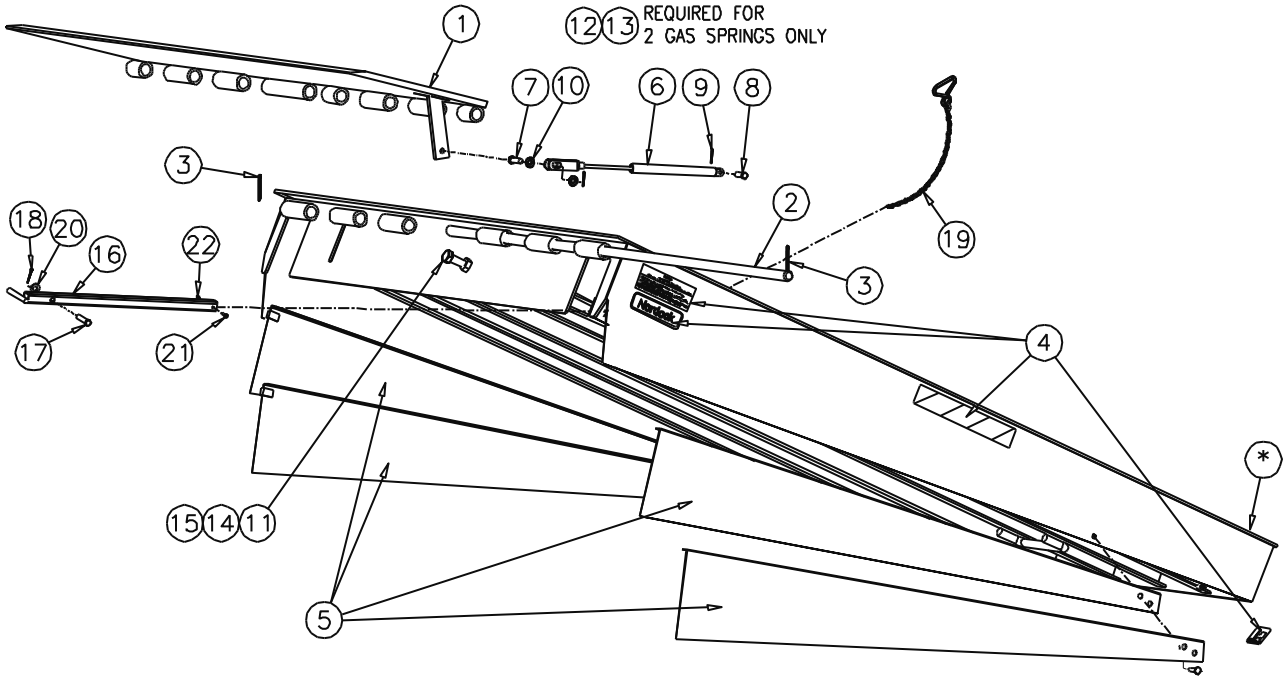

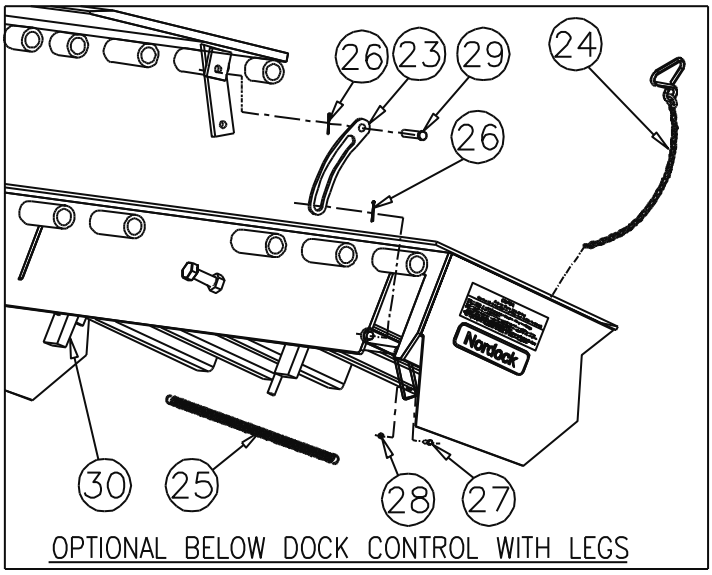

OPTIONAL BELOW DOCK CONTROL WITH LEGS

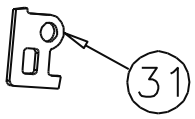

OPTIONAL LIP LOCK

Item	Qty.	Description / Model							Note
1	1	Lip Weldment							
		Capacity	Length	P/N					
				6’	6.5’	7’	7’T	70”	
		30K	16”	42-2339	42-2392	42-2357	42-2342	42-2368	
			18”	42-2340	42-2393	42-2358	42-2343	42-2369	
			20”	42-2341	42-2394	42-2359	42-2356	42-2370	
		35K	16”	42-2344	42-2395	42-2347	42-2360		
			18”	42-2345	42-2396	42-2348	42-2361		
			20”	42-2346	42-2397	42-2349	42-2362		
		40-45K	16”	42-2350		42-2353	42-2363	42-2285	
			18”	42-2351		42-2354	42-2364	42-2286	
			20”	42-2352		42-2355	42-2365	42-2287	

Item	Qty.	Description / Model		P/N	Note
2	1	Lip Hinge Rod	6' Wide Dock 6.5' Wide Dock 7' Wide Dock 70" Wide Dock	43-1382 43-1383 43-1384 43-1385	
3	2	Spring Pin, 1/4" x 1 3/4"		13-0555	
4	1	Dock Leveler Decal Kit		42-0392	1
5	1	Telescoping Side Skirt Kit (optional, if equipped)	6' Long Docks 8' Long Docks	42-0393 42-0394	
Gas Spring Components (Qty. as required, when equipped):					
6	A/R	Gas Spring – Lip Extend (Quantity As Required) Gas Spring c/w Clevis End (Pt11)		 42-1568	
7	1	Clevis Pin - Gas Spring to Lip For one gas spring - Clevis Pin, 1/2" x 1 1/4" For two gas springs - Clevis Pin, 1/2" x 2 1/4"		 13-2111 13-0288	
8	1	Pin - Gas Spring to Deck For one gas spring - Clevis Pin, 3/8" x 1 5/8" For two gas springs – Bolt, Hex, 5/16" x 3 1/4"		 13-0500 13-2002	
9	2	Cotter Pin, 1/8" x 1		13-0171	
10	2	Washer, 3/8" SAE Flat		13-0203	
11	1	5/8" Dia. Nut, Bolt x 4" Long		13-0302	
12	1	Nut, Nylock, 5/16", plated (req'd two gas springs only)		13-0846	
13	2	Washer, Flat, 3/8", plated (req'd two gas springs only)		13-0203	
14	1	Nut, Hex, 5/8", plated		13-0289	
15	1	Lock Washer, 5/8"		13-0657	
*	1	Rear Cup pulley & hardware - see Hold Down Section, Items 25-27			
Below Dock Control					
16	1	Lip Extend Bracket – Handle to Lip		42-2016	
17	1	Clevis Pin – Lip Extend, ½" x 2 ¼"		13-0288	
18	1	Cotter Pin, 1/8" x 1"		13-0171	
19	1	Lip Extend Chain – Deck to Handle (9 ½")		42-1415	
20	1	Washer, ½", plated		13-0267	
21	1	Screw, 10-24 x 1" long, plated		13-0841	
22	1	Nut, Nylock, 10-24 plated		13-1858	
Optional Below Dock Control with Legs					
23	1	End Load Linkage Arm – Handle to Lip		43-0194	
24	1	Below Dock Release Chain Deck to Handle (15")		42-0299	
25	1	Below Dock Return Spring		13-0294	
26	2	Cotter Pin, 1/8" x 1		13-0171	
27	1	Screw, #10-24 x ¾"		13-0787	
28	1	Nut, Nylock #10-24		13-0582	
29	1	Clevis Pin, ½" x 1"		13-0805	
30	1	Leg Weldment, 19" Frame		42-2400	
Optional Lip Maintenance Lock					
31	1	Lip Lock		43-1062	

Note 1: For correct decal placement, see safety section.

Section 2 – Lip Extend Assembly

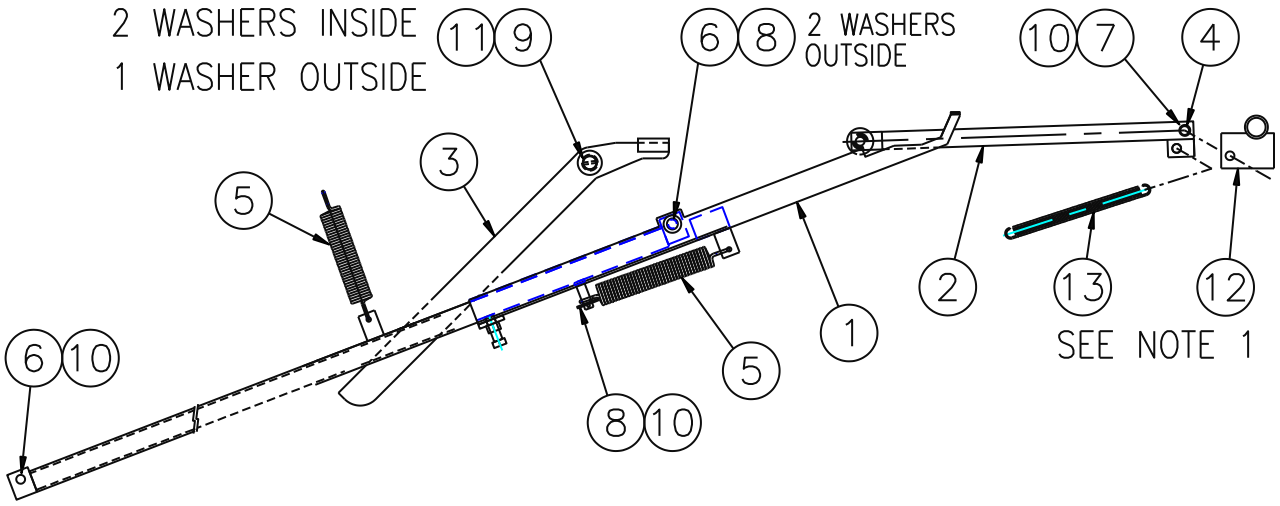

Item	Qty.	Description / Model		P/N	Note
1	1	Rear Push-	6' Long Dock 8' Long Dock	42-2217 42-2219	
2	1	Front Push-bar Assembly, 17 ¾" c to c		42-2410	
3	1	Kick-out Lever		42-2182	
4	1	Bushing, Sleeve, ½" ID x 5/8" OD x 1" Long (c/w Item 2)		13-0434	
5	2	Spring, 1 ¼" OD x 7 ½" long		13-1955	**2**
6	2	Clevis Pin – ½" x 2¼", Plated		13-0288	**2**
7	1	Clevis Pin – ½" x 2"		13-0398	
8	3	Flat Washer, 1/2", Plated		13-0267	**2**
9	3	Flat Washer, 3/4", Plated		13-0968	
10	4	Cotter Pin, 1/8" x 1" long		13-0171	**2**
11	1	Cotter Pin, 1/8" x 1½" long		13-0397	
12	1	Cam Weldment	25-30K 35-45K	42-2417 42-2411	
13	1	Spring, 5/8" OD x 8 1/2" long		13-0294	
Auto Descent Lip Extend Assembly (Items 1-11)			6' Long Dock 8' Long Dock'	42-3826 42-3827	**1**

Note 1 - Item 11 Cam and Item 12 cam spring to be ordered separately.

Section 3 – Frame Assembly

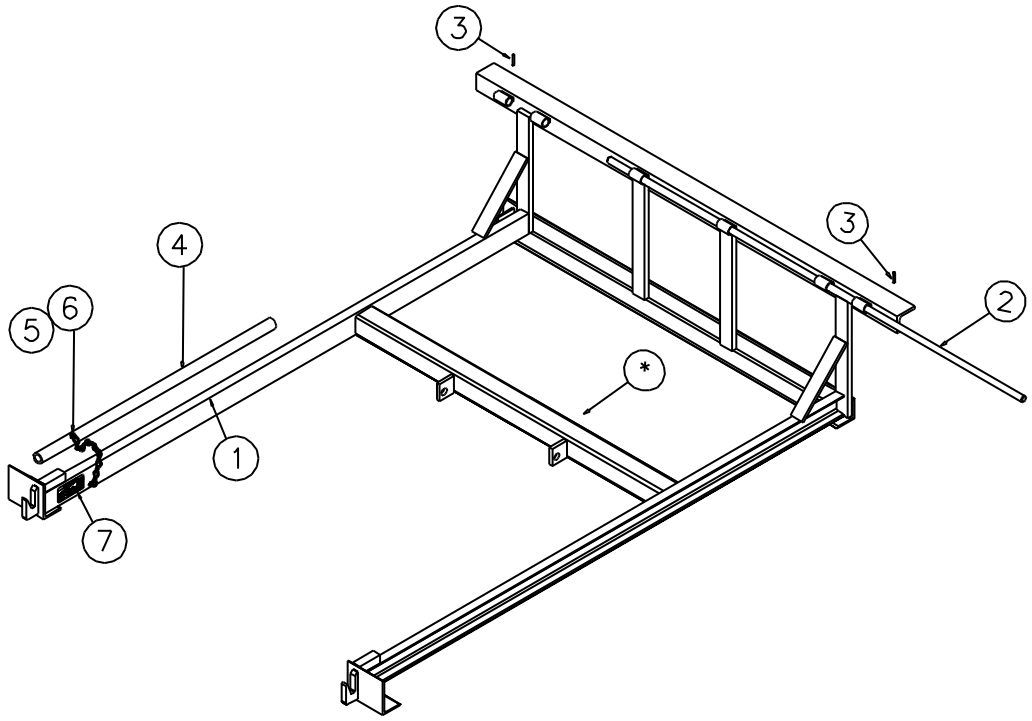

Item	Qty.	Description / Model							Note
1	1	Frame Weldment							1,2
		Capacity	Dock Length	Frame Depth	P/N - Dock Width 6’	P/N - Dock Width 6.5’	P/N - Dock Width 7’	P/N - Dock Width 70”	
		30-45K	6’	19”	42-2300	42-2303	42-2306	42-2297	
			8’	19”	42-2301	42-2304	42-2307	42-2298	
2	1	Rear Hinge Rod			43-0154	43-0155	43-0156	43-0462	
								P/N	
3	2	Spring Pin, 1/4" x 2"						13-0555	
4	1	Maintenance / Support Stand			Standard Dock (40”)			43-0262	
5	1	Washer, ¼” Fender, Plated						13-0271	
6	1	Screw, ¼” -14 x 1, Tek, Hex Head, plated						13-0273	
7	1	Decal, Dock leveler, Lock-Out Tag-Out						43-1287	
*		8’ long frame pulley & hardware - see Hold Down Section, Items 25-27							

Note 1 – CM docks use a spacer kit for a 23” frame depth.
Note 2 - The standard Rear Frame angle width is 3”. Widths may vary to suit pit length. Please consult factory when ordering replacement frames.

Section 4 – Optional Equipment

Option	Qty.	Description / Location	P/N	Note
Bumper	2	Standard Bumper, AF410-11	61-0001	1
Weather Seals	6’ 8’	Brush Seal and Mounting Extrusion Kit Brush Seal and Mounting Extrusion Kit	61-0025 61-0024	

Note 1 – For custom bumper sizes and applications, please contact your nearest Nordock representative or call 1-866-885-4276.

Section 5 – Deck Lift and Float Assembly

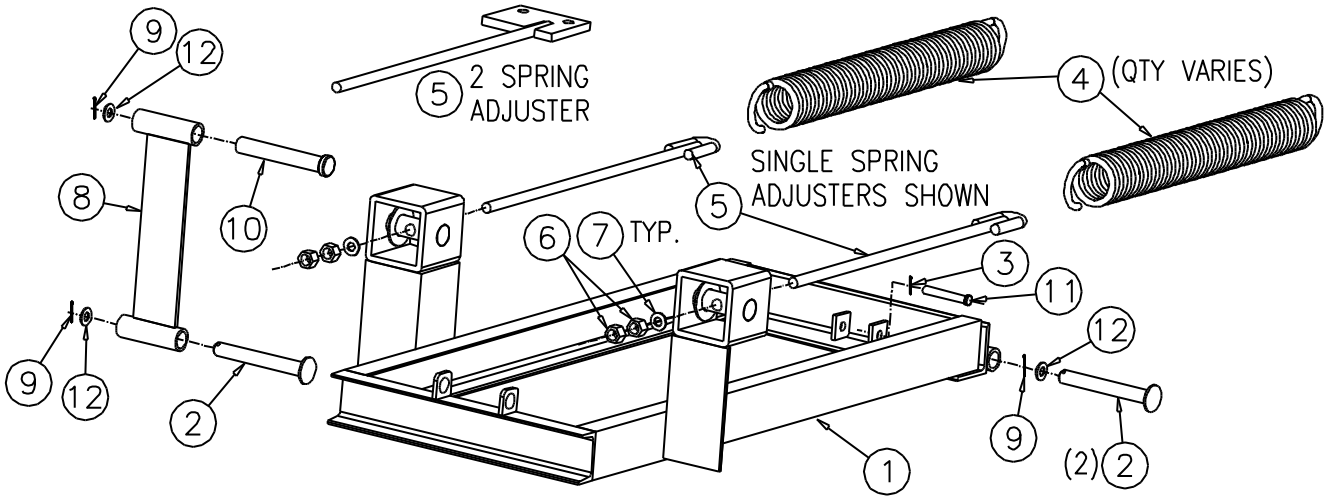

Item	Qty.	Description / Model			P/N	Note
1	1	Lift Arm Weldment	25-45K	66, 6.56, 76	42-0470	
			25-45K	68, 6.58, 78	42-0423	
2	3	Lift Arm Mount Pin, 7/8" x 5 ¾" long			42-0759	
3	1	Nut, Hex, 3/8" Nylock			13-0397	
4	C/F	Main Lift Spring		Standard Duty (.408" wire) Heavy Duty (.468" wire)	13-0007 13-0006	1 1
5	C/F	Spring Adjuster		6' Dock length 1 Spring 8' Dock length 1 Spring 6' Dock length 2 Springs 8' Dock length 2 Springs	42-0654 42-0397 42-0656 42-0637	
6	4	Nut, 5/8" - 11			13-0289	
7	2	Washer, 5/8"			13-0952	
8	1	Upper Lift Arm Weldment			42-0933	
9	4	Cotter Pin, 1/4" x 1 3/4"			13-0992	
10	1	Upper Lift Arm Mount Pin, HM, 7/8 x 4 ¾ " long			42-0936	
11	1	Bolt, Shoulder, 1/2" x 2", Plated			13-0344	
12	4	Washer, 1 3/8" O.D. x 7/8" I.D.			13-3575	
13	1	Optional Spring Adjuster Tool, not shown			42-1208	

C/F – Consult Factory

Note 1: Lift springs are matched at the factory. Please call your local Nordock dealer or 1-866-885-4276 for replacement springs.

Section 6 – Hold Down Assembly

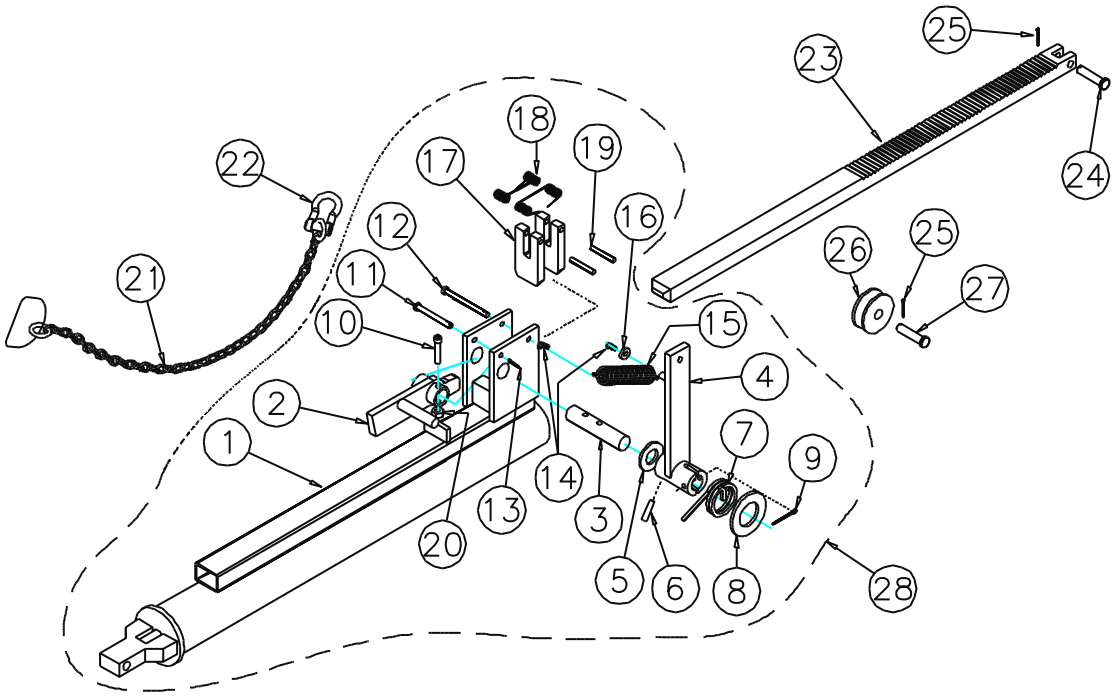

Item	Qty.	Description / Model		P/N	Note
1	1	Hold Down Weldment		42-0938	
2	1	Pawl Lifter Weldment		42-1350	
3	1	Hold Down Release Handle Pivot Shaft		43-0798	
4	1	Hold Down Release Weldment		42-1351	
5	1	Flat Washer, 3/4” Dia.		13-0649	
6	1	Grooved Pin, 1/4” x 1 1/4”		13-1513	
7	1	Spring, .162” Square Wire		43-0269	
8	1	Washer, 1 1/8” SAE, Plated		13-3700	
9	1	Cotter Pin, 1/4” x 1 3/4”		13-0992	
10	1	Cap Screw, 1/4” x 1 1/2” long		13-1528	
11	1	Clevis Pin, 1/4” x 2 1/4”		13-0521	
12	1	Clevis Pin, Universal, 1/4” x 2 1/2”		13-1525	
13	1	Cotter Pin Clip, 1/16” x 1”		13-0516	
14	2	Hitch Pin Clip		13-1526	
15	1	Spring, .085” Dia. Wire, 3 ½” Long		13-1524	
16	1	Fender Washer, 1/4”		13-0271	
17	2	Hold Down Pawl		43-0180	
18	2	Pawl Spring		43-0265	
19	2	Pawl Pin		43-0388	
20	1	Nut, 1/4”-20 Plated, Nylock		13-0270	
21	1	Hold Down Release Handle Chain	6’ Dock (40”) 8’ Dock (63”)	42-1000 42-1355	
22	1	Shackle Anchor, 1/4” Screw Pin		13-0540	
23	1	Ratchet Bar		43-0179	
24	1	Clevis Pin, 3/8” x 1 5/8”		13-0500	
25	2	Cotter Pin, 1/8” x 1”		13-0171	
26	1	Wheel, 2" White Plastic, 8’ Frames; All Rear Cup		13-0169	
27	1	Clevis Pin, 3/8” x 1 5/8”, 8’ Frames; All Rear Cup		13-0500	
28	1	Hold Down Base Assembly, Items 1 to 20		42-0940	

NORDOCK®

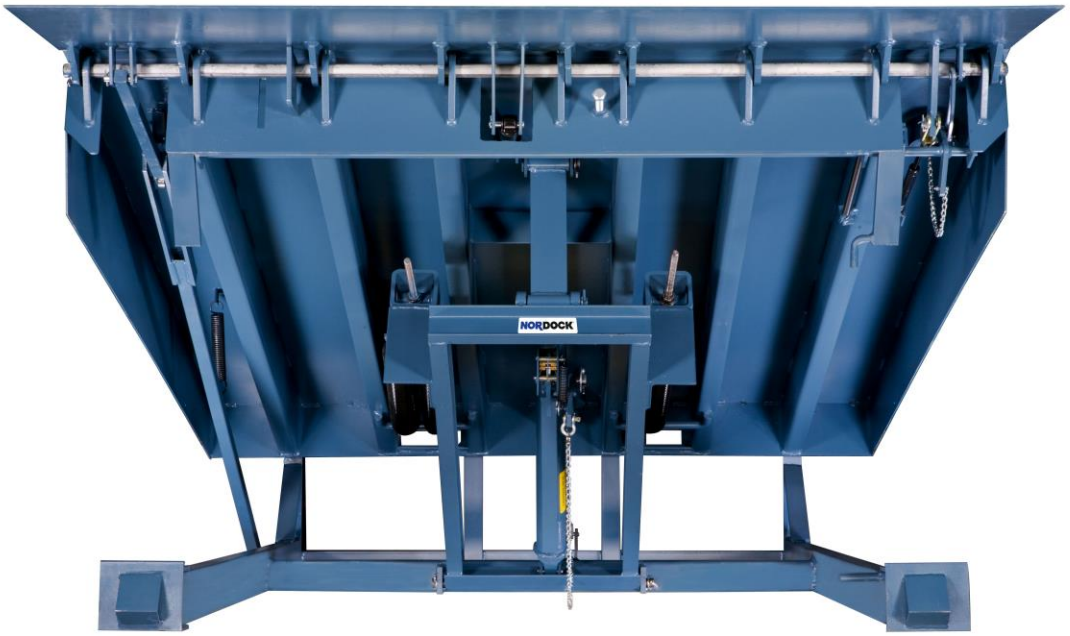

Mechanical Dock Leveler
INDUSTRIAL™ Series
Model (NM)

20,000 to 50,000 lbs. Capacity

Parts Manual

This manual applies to NM series dock levelers manufactured on or after September 2018, with Serial Numbers 46064 and greater.

P/N: 49-0158-L

NORDOCK INC.
Website: nordockinc.com ~ Email: sales@nordockinc.com ~ Toll free: 866-885-4276
Nordock Incorporated reserves the right to make changes to specifications without notice or obligation. Nordock products may be covered by various U.S. and foreign patents or pending applications.

Parts and Service Tables

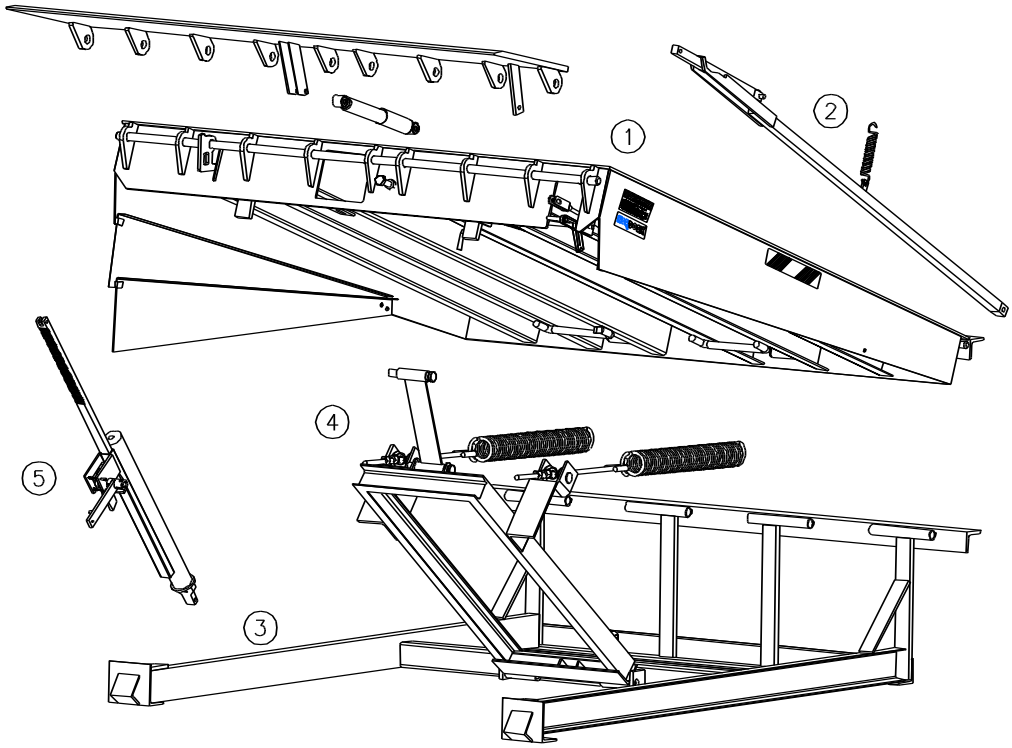

Item Number/ Section	Description
1	Deck and Lip Assembly
2	Lip Extend Assembly
3	Frame Assembly
4	Deck Lift Arm and Float Assembly
5	Hold Down Assembly

Note: Not all parts and weldments are noted in this manual. Only those that are serviceable and/or replaceable will be listed. For additional information on those parts not included in this manual, please contact Nordock. Remember to make note of the model and serial number of the unit for accurate parts and service.

Section 1 – Deck and Lip Assembly

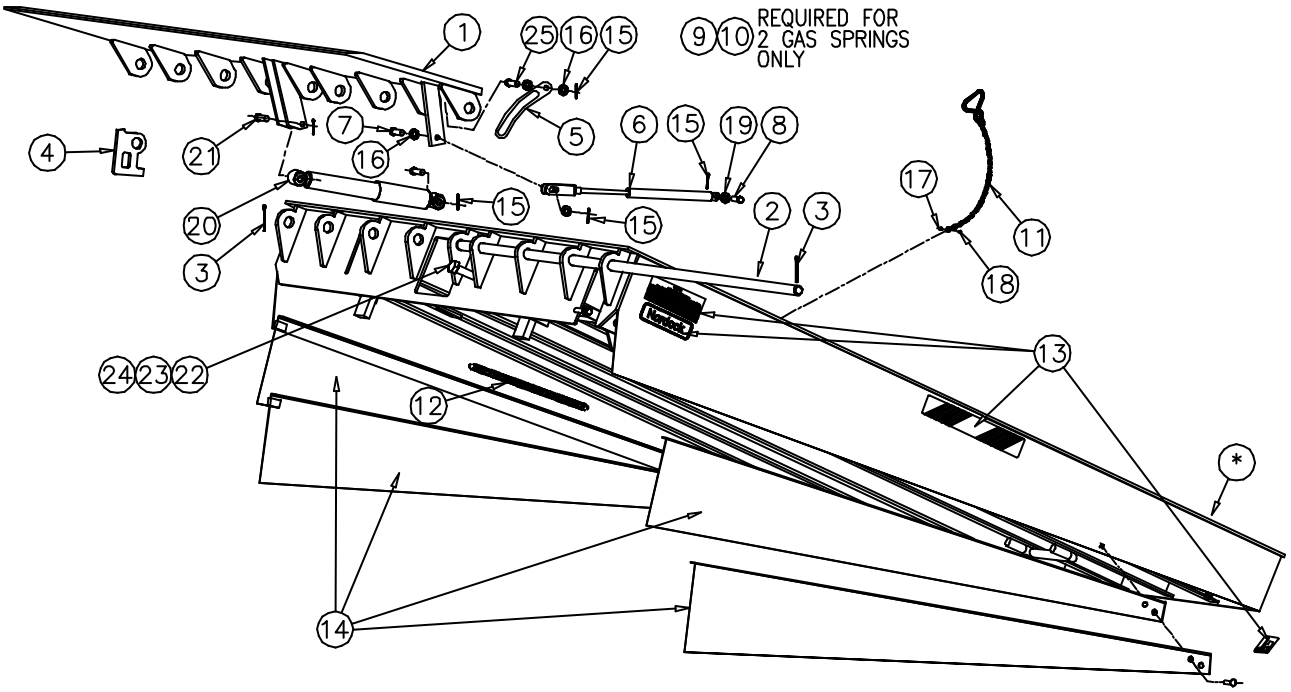

Item	Qty.	Description / Model							Note
1	1	Lip Weldment							
		Capacity	Lip Length	P/N – Dock Width					
				6’	6.5’	7’	7’T	70”	
		20-25K	16”	42-1615	42-1624	42-1633	42-1642	42-1606	
			18”	42-1616	42-1625	42-1634	42-1643	42-1607	
			20”	42-1617	42-1626	42-1635	42-1644	42-1608	
		30-40K	16”	42-1618	42-1627	42-1636	42-1645	42-1609	
			18”	42-1619	42-1628	42-1637	42-1646	42-1610	
			20”	42-1620	42-1629	42-1638	42-1647	42-1611	
		45-50K	16”	42-1621	42-1630	42-1639	42-1648	42-1612	
			18”	42-1623	42-1631	42-1640	42-1649	42-1613	
			20”	42-1624	42-1632	42-1641	42-1650	42-1614	
2	1	Lip Hinge Rod		43-0148	43-0149	43-0150	43-0150	43-0465	

Chart cont’d next page

Item	Qty.	Description / Model		P/N	Note
3	2	Spring Pin, 1/4" x 2"		13-0555	
4	1	Lip Safety Lock Lug		43-0252	
5	1	End Load Linkage Arm – Handle To Lip		43-0194	
6	A/R	Gas Spring – Lip Extend (Quantity As Required) Gas Spring c/w Clevis End		 42-1568	
7	1	Clevis Pin - Gas Spring to Lip For single gas spring - Clevis Pin, 1/2" x 1 1/4" For two gas springs - Clevis Pin, 1/2" x 2 1/4"		 13-2111 13-0288	
8	1	Pin - Gas Spring to Deck For single gas spring - Clevis Pin, 3/8" x 1 5/8" For two gas springs – Bolt, Hex, 5/16" x 3 1/4"		 13-0500 13-2002	
9	1	Nut, Nylock, 5/16", plated (req'd for two gas springs only)		13-0846	
10	2	Washer, flat, 3/8" , plated (req'd for two gas springs only)		13-0203	
11	1	Below Dock Release Chain – Deck to Handle, 15"		42-0299	
12	1	Below Dock Leg Return Spring		13-0294	
13	1	Dock Leveler Decal Kit		42-0392	1
14	1	Telescoping Side Skirt Kit (optional, if equipped)	6' Long Docks 8' Long Docks 10' Long Docks	42-0393 42-0394 42-0395	
15	6	Cotter Pin, 1/8" x 1"		13-0171	
16	4	Washer, 1/2"		13-0267	
17	1	Nut, Nylock, #10-24		13-0582	
18	1	Screw, #10-24 x 3/4"		13-0787	
19	1	Washer, 3/8" SAE Flat		13-0203	
20	1	Damper		13-0144	
21	2	Clevis Pin, Damper 1/2" x 2 1/4 "		13-0288	
22	1	Bolt, Hex, 5/8" x 4" long		13-0302	
23	1	Nut, Hex, 5/8"		13-0289	
24	1	Lock Washer, 5/8"		13-0657	
25	1	Clevis Pin, ½" x 1"		13-0805	
*	1	Rear Cup pulley & hardware - see Hold Down Section, Items 25-27			

Note 1 – For correct decal placement, see safety section

Section 2 – Lip Extend Assembly

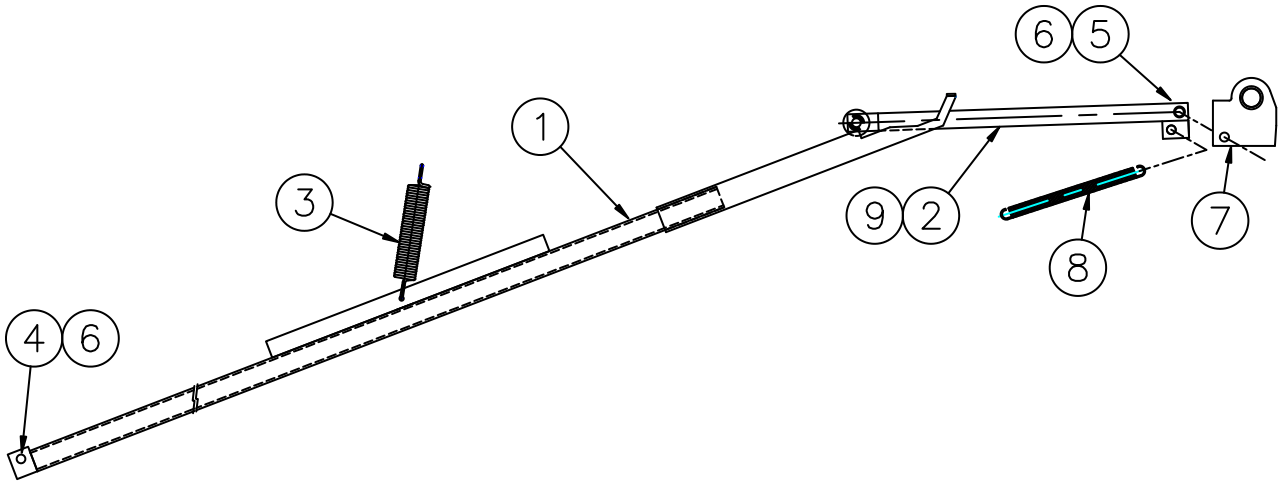

Item	Qty.	Description / Model		P/N	Note
1	1	Rear Push-bar, Dock Length x Frame Depth	6' x 17" 6' x 19" & 23"	42-1749 42-2900	
			8' x 17" 8' x 19" & 23"	42-1750 42-2185	
			10' x 19" & 23"	42-2388	
2	1	Front Push-bar Weldment, c/w Item 9, 18½" c to c holes		42-2409	
3	1	Spring, 1 ¼" OD x 7 ½" long		13-1955	
4	1	Clevis Pin – ½" x 2-1/2", Plated		13-1099	
5	1	Clevis Pin – ½" x 2"		13-0398	
6	2	Cotter Pin, 1/8" x 1"		13-0171	
7	1	Cam Weldment, NM, 20-50K		42-2413	
8	1	Spring, 5/8" OD x 8 1/2" long		13-0294	
9	1	Bushing, Sleeve, ½" ID x 5/8" OD x 1" Long (c/w Item 2)		13-0434	
Lip Extend Assembly (Parts1-6)			6' x 19" and 23" Long Fr. 8' x 19" and 23" Long Fr. 10' x 19"and 23" Long Fr.	42-1752 42-1753 42-1754	1

Note 1 – Cam and spring to be ordered separately.

Section 3 – Frame Assembly

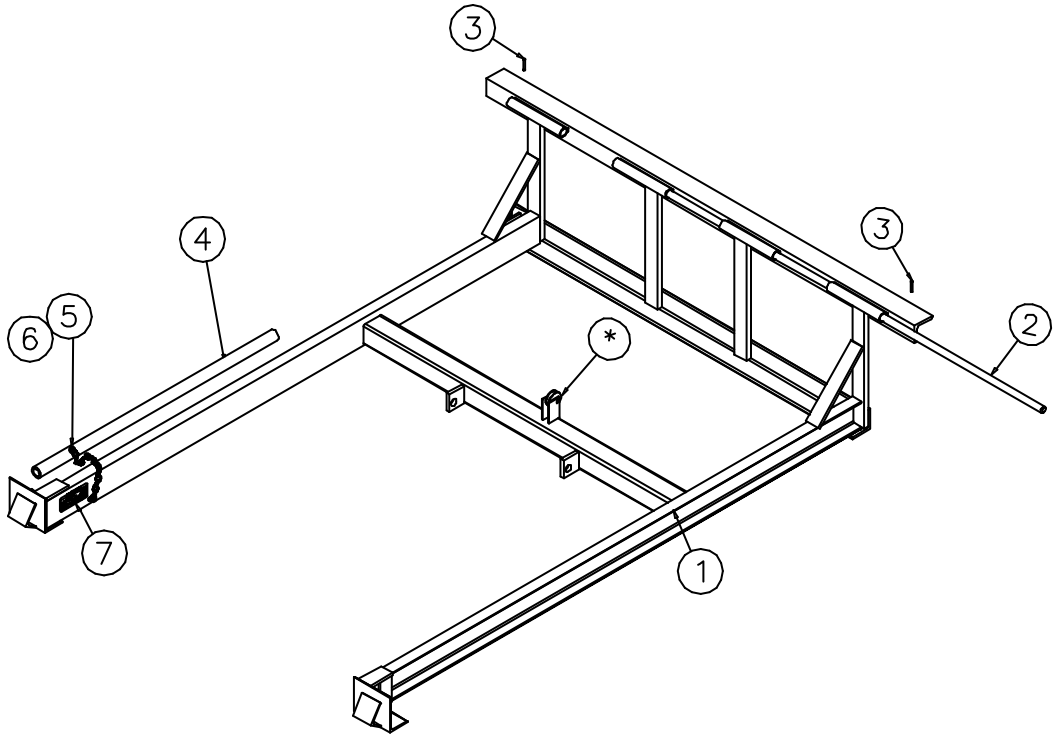

Item	Qty.	Description / Model							Note
1	1	Frame Weldment							1,2
		Capacity	Dock Length	Frame Depth	P/N - Dock Width 6’	P/N - Dock Width 6.5’	P/N - Dock Width 7’	P/N - Dock Width 70’’	
		20-40K	6’	17”	42-2436				
				19”	42-1654	42-1657	42-1660	42-1651	
			8’	17”	42-2437		42-3508		
				19”	42-1655	42-1658	42-1661	42-1652	
			10’	17”					
				19”	42-1656	42-1659	42-1662	42-1653	
		45-50K	6’	17”					
				19”	42-1665	42-1667	42-1669	42-1663	
			8’	17”	42-2440	42-2439			
				19”	42-1666	42-1668	42-1670	42-2446	
			10’	17”	42-2438				
				19”	42-2447	42-2448	42-2449		
2	1	Rear Hinge Rod			43-0154	43-0155	43-0156	43-0462	
								P/N	
3	2	Spring Pin, 1/4" x 2"						13-0555	
4	1	Maintenance / Support Stand			Standard Dock (40”)			43-0262	
					17” Frame Dock (36”)			43-0600	
5	1	Washer, ¼” Fender, Plated						13-0271	
6	1	Screw, ¼” -14 x 1, Tek, Hex Head, plated						13-0273	
7	1	Decal, Dock leveler, Lock-Out Tag-Out						43-1287	
*		8’&10’ lg. frame pulley & hardware - see Hold Down Section, Items 25-27							

Note 1 – NM docks use a spacer kit for a 23” frame depth
Note 2 – The standard Rear Frame angle width is 3”. Widths may vary to suit pit length. Please consult factory when ordering replacement frames.

Section 4 – Deck Lift and Float Assemblies

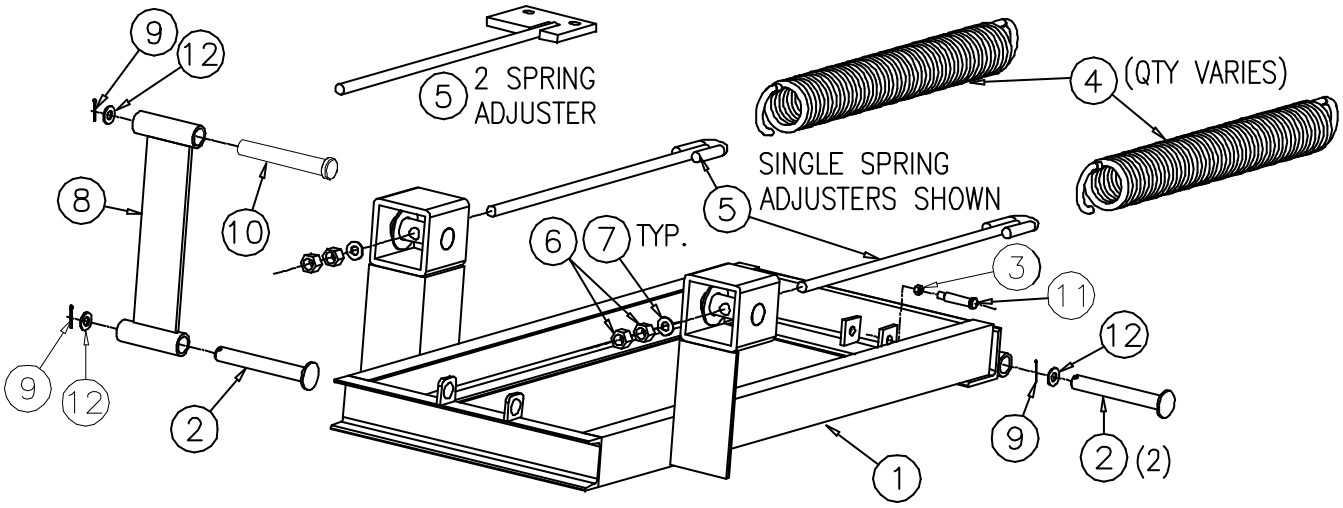

Item	Qty.	Description / Model			P/N	Note
1	1	Lift Arm Weldment	20-40K	66, 6.56, 76	42-0470	
			45-50K	66, 6.56, 76	42-1082	
			20-25K	68	42-1420	
			30-40K 20-40K	68 6.58, 78	42-0423	
			45-50K 45K	68, 6.58 78	42-1083	
			50K	78	42-1349	
			20-25K 30K	610 610 16", 18" Lip	42-0846	
			30K 25K 40-50K	610 20" Lip 710 610,6.510,710	42-1349	
2	3	Lift Arm Mount Pin, ø7/8" x 5 ¾"			42-0759	
3	1	Nut, Hex, 3/8" Nylock			13-0707	
4	A/R	Main Lift Spring	Standard Duty, (.408" Wire) Heavy Duty, (.468" Wire)		13-0007 13-0006	1 C/F
5	A/R	Spring Adjuster	Dock Lgth:	1 Spring	2 Springs	
			6' 8' 10'	42-0654 42-0397 42-0655	42-0656 42-0637 42-0657	C/F
6	4	Nut, Hex, 5/8" - 11			13-0289	
7	2	Washer, 5/8"			13-0952	
8	1	Upper Lift Arm Weldment			42-0933	
9	4	Cotter Pin, 1/4" x 1 3/4"			13-0992	
10	1	Upper Lift Arm Mount Pin, ø7/8" x 4 ¾"			42-0936	
11	1	Bolt, Shoulder, 1/2" x 2", Plated			13-0344	
12	4	Washer, 1 3/8" O.D. x 15/16" I.D.			13-3575	
13		Spring Adjuster Tool (sold separately, not shown)			42-1208	

C/F – Consult Factory.
Note 1 – Lift springs are matched at the factory. Please call your local Nordock dealer or 1-866-885-4276 for replacement springs.

Section 5 – Hold Down Assembly

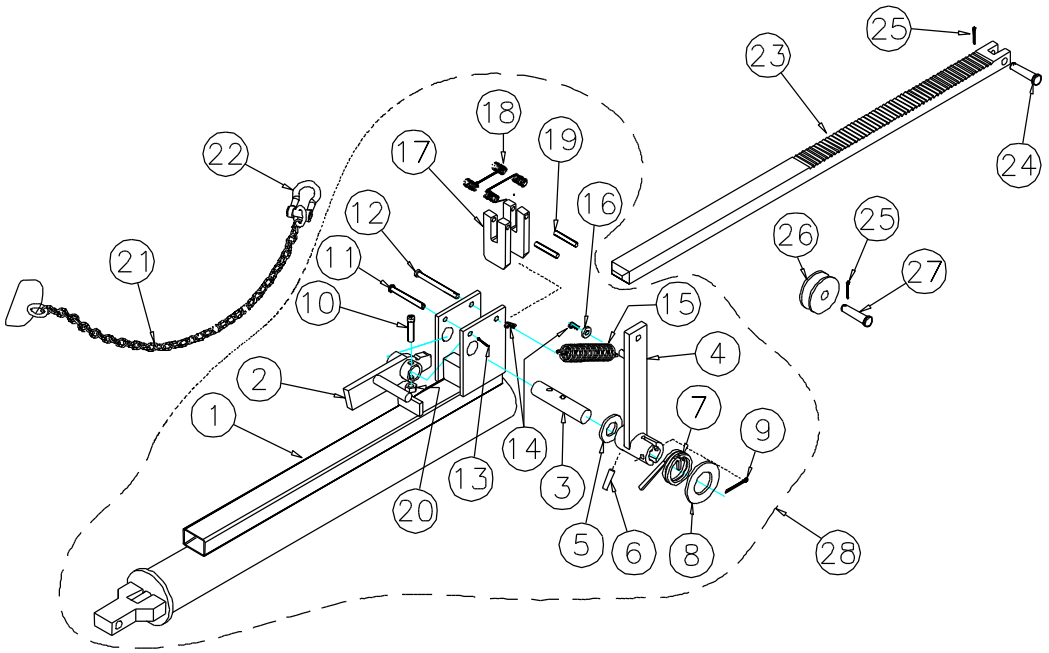

Item	Qty.	Description / Model		P/N	Note
1	1	Hold Down Weldment		42-0938	
2	1	Pawl Lifter Weldment		42-1350	
3	1	Hold Down Release Handle Pivot Shaft		43-0798	
4	1	Hold Down Release Weldment		42-1351	
5	1	Flat Washer, 3/4”		13-0649	
6	1	Grooved Pin, 1/4” x 1 1/4”		13-1513	
7	1	Spring, 0.162” Square Wire		43-0269	
8	1	Washer, 1 1/8”, SAE, plated		13-3700	
9	1	Cotter Pin, 1/4” x 1 3/4”		13-0992	
10	1	Cap Screw, 1/4” x 1 1/2” long		13-1528	
11	1	Clevis Pin, 1/4” x 2 1/4”		13-0521	
12	1	Clevis Pin, Universal, 1/4” x 2 1/2”		13-1525	
13	1	Cotter Pin, 1/16” x 1”		13-0516	
14	2	Hitch Pin Clip		13-1526	
15	1	Spring, .085” Dia. Wire, 3 ½” Long		13-1524	
16	1	Fender Washer, 1/4”		13-0271	
17	2	Hold Down Pawl		43-0180	
18	2	Pawl Spring		43-0265	
19	2	Pawl Pin		43-0388	
20	1	Nut, 1/4”-20 Plated Nylock		13-0270	
21	1	Hold Down Release Handle Chain	6’ Dock (40”) 8’ Dock (63”) 10’ Dock (73”)	42-1000 42-1355 42-1373	
22	1	Shackle Anchor, 1/4” Screw Pin		13-0540	
23	1	Ratchet Bar		43-0179	
24	1	Clevis Pin, 3/8” x 1 5/8”		13-0500	
25	2	Cotter Pin, 1/8” x 1”		13-0171	
26	1	Wheel, 2" White Plastic, 8’&10’ Frames; Rear Cup - all		13-0169	
27	1	Clevis Pin, 3/8” x 1 5/8”, 8’&10’ Frames; Rear Cup - all		13-0500	
28	1	Hold Down Assembly, Items 1 to 20		42-0940	

NORDOCK®



Hydraulic Dock Leveler
HEAVY-DUTY™ Series
Model (NH)
25,000 to 50,000 lbs. Capacity

Parts Manual

This manual applies to dock levelers manufactured on or after September 2018 with Serial Numbers 44064 and greater.

P/N: 49-0169-E

NORDOCK INC.
Website: nordockinc.com ~ Email: sales@nordockinc.com ~ Toll free: 866-885-4276
Nordock Incorporated reserves the right to make changes to specifications without notice or obligation.
Nordock products may be covered by various U.S. and foreign patents or pending applications.

Parts and Service Tables

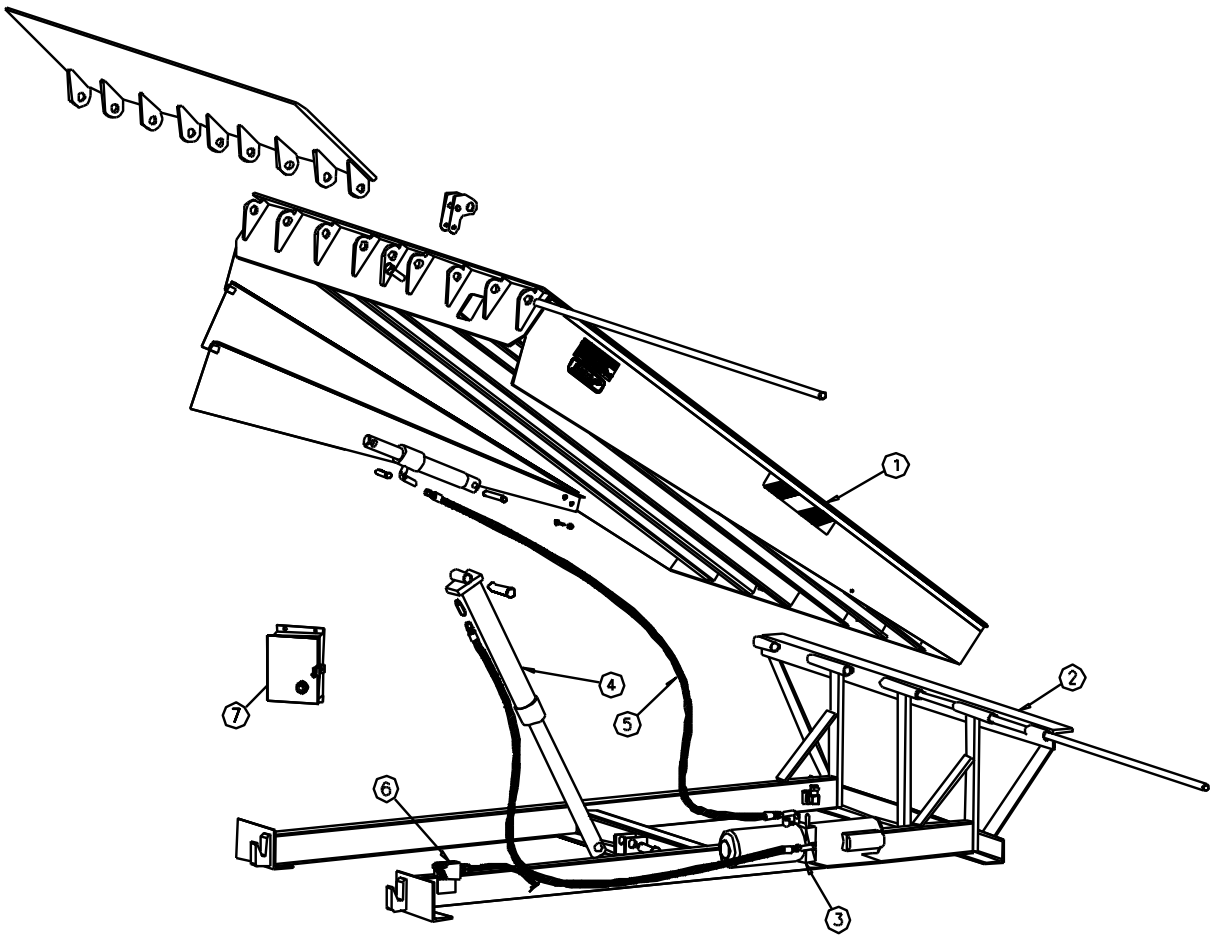

Item Number/ Section	Description
1	Deck and Lip Assembly
2	Frame Assembly
3	Power Pack and Related Hydraulic Components
4	Hydraulic Cylinders
5	Hydraulic Lines and Fittings
6	Optional Equipment
7	Control Panel

Note: Not all parts and weldments are noted in this manual. Only those that are serviceable and /or replaceable will be listed. For additional information on those parts not included in this manual, please contact Nordock Inc. Remember to make note of the model and serial number of the unit for accurate parts and service.

Section 1 – Deck and Lip Assembly

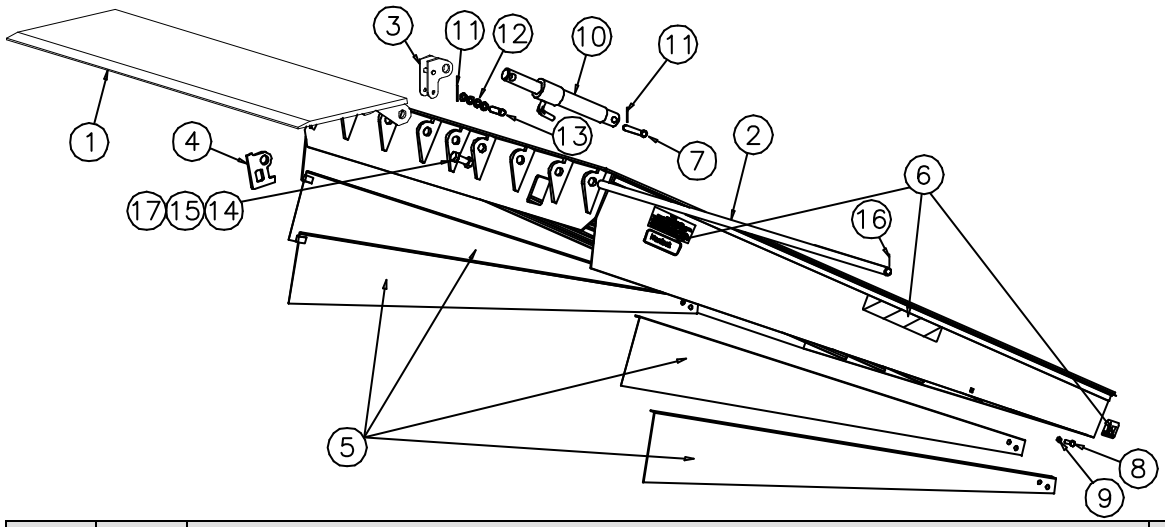

Item	Qty.	Description / Model							Note
1	1	Lip Weldment		P/N, Deck Width					
		Cap.	Length	6’	6.5’	7’	7’T	70”	
		20-25K	16”	42-0332	42-0343	42-0355	42-0366	42-0858	
			18”	42-0333	42-0344	42-0356	42-0367	42-0859	
			20”	42-0334	42-0345	42-0357	42-0368	42-0860	
		30-40K	16”	42-0028	42-0346	42-0358	42-0369	42-0883	
			18”	42-0335	42-0347	42-0359	42-0370	42-0922	
			20”	42-0336	42-0348	42-0360	42-0371	42-0923	
		45-50K	16”	42-0337	42-0349	42-0361	42-0372	42-0924	
			18”	42-0338	42-0350	42-0362	42-0373	42-0925	
			20”	42-0339	42-0351	42-0363	42-0374	42-0926	
2	1	Hinge Rod, 1”		43-0148	43-0149	43-0150	43-0150	43-0465	
								P/N	
3	1	Lip Cam Weldment				20-50K		42-0821	
4	1	Lip Safety Lock Lug						43-0252	
5	1	Telescoping Side Skirt Kit – 6’						42-0393	
	1	Telescoping Side Skirt Kit – 8’						42-0394	
	1	Telescoping Side Skirt Kit – 10’						42-0395	
6	1	Dock Leveler Decal Kit						42-0392	1
7	1	Clevis Pin, 1/2" x 4 1/2"						13-3672	
		Optional St St Pin						43-1026	
8	2	Bolt, 3/8” - 16 UNC x 1 1/4" Carriage Head						13-0122	
9	2	Nut, 3/8" - 16 Grade 5, Nylock						13-0707	
10	1	Lip Cylinder - 1 1/2”						C1-0009	
		Seal Kit - 1 1/2”						C3-0025	
11	2	Cotter Pin, 1/8” x 1”						13-0171	
12	4	Washer, 1/2" Flat						13-0267	
13	1	Clevis Pin, 1/2" x 3 1/2"						13-0399	
		Optional St St Pin, ½” x 4”						43-1025	
14	1	5/8” Dia. Nut, Bolt x 4” Long						13-0302	
15	1	Nut, Hex, 5/8”-11NC, plated						13-0289	
16	2	Roll pin, ¼” x 2”						13-0555	
17	1	Washer,						13-0657	

NOTE 1: – For correct decal placement, see safety section..

Section 2 – Frame

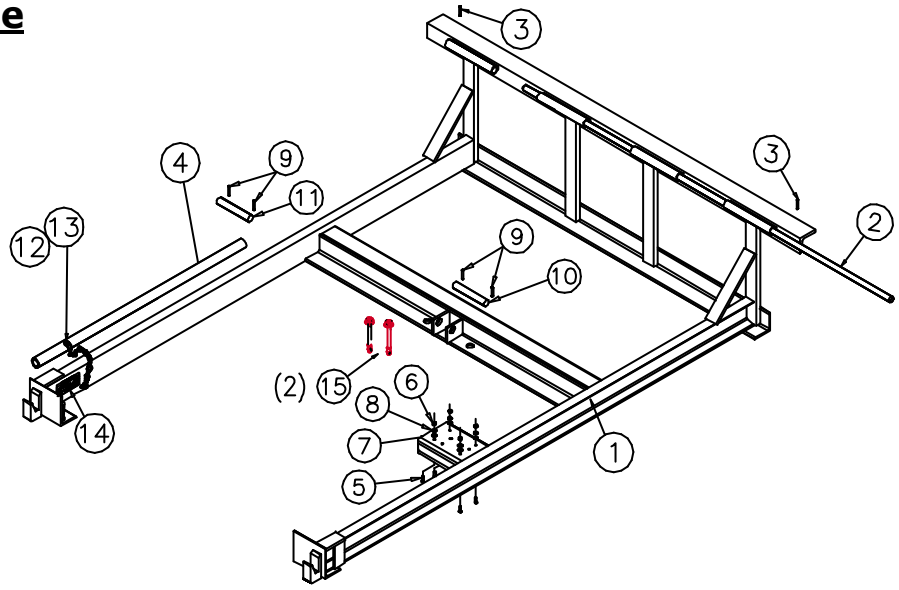

Item	Qty.	Description / Model							Note
1	1	Capacity	Dock Length	Frame Depth	P/N - Dock Width				
					6’	6.5’	7’	70’’	
		Frame Weldment 20-40K	6’	19”	42-1876	42-1879	42-1882	42-1885	
				23”	42-1888	42-1891	42-1894	42-1897	
			8’	19”	42-1877	42-1880	42-1883	42-1886	
				23”	42-1889	42-1892	42-1895	42-1898	
			10’	19”	42-1878	42-1881	42-1884		
				23	42-1890	42-1893	42-1896		
		Frame Weldment 45-50K	6’	19”	42-2455	42-2458	42-2461		
				23	42-2464	42-2467	42-2470		
			8’	19”	42-2456	42-2459	42-2462		
				23	42-2465	42-2468	42-2471		
			10’	19”	42-2457	42-2460	42-2463		
				23	42-2466	42-2469	42-2472		
2	1	Rear Hinge Rod			43-0154	43-0155	43-0156	43-0462	
								P/N	
3	2	Spring Pin, 1/4" x 2"						13-0555	
4	1	Maintenance / Support Stand				Standard Dock (40”) 17” Frame Dock (36”)		43-0262 43-0600	
5	4	Bolt, Hex, 1/4" – 20 UNC x 1”						13-0623	
6	4	Nut, 1/4" – 20 UNC, Plated						13-0334	
7	4	Washer, 1/4" SAE Flat						13-0272	
8	4	Washer, 1/4” Lock						13-0335	
9	4	Cotter Pin, 1/4” x 1 3/4"						13-0992	
10	1	Lower Cylinder Mount Pin, 4 ½” long Optional St St Pin						43-0312 43-1028	
11	1	Upper Cylinder Mount Pin, 6 ¾” long Optional St St Pin						43-0310 43-1027	
12	1	Decal, Dock leveler, Lock-Out Tag-Out						43-1287	
13	1	Screw, ¼” -14 x 1, Tek, Hex Head, plated						13-0273	
14	1	Washer, ¼” Fender, Plated						13-0271	
15	2	Anchor, Wedge, ¾” x 5 ½” long, plated						13-4569	

Note 1 – The standard Rear Frame angle width is 3”. Widths may vary to suit pit length. Please consult factory when ordering replacement frames.

Section 3 – Power Pack and Related Hydraulic Components

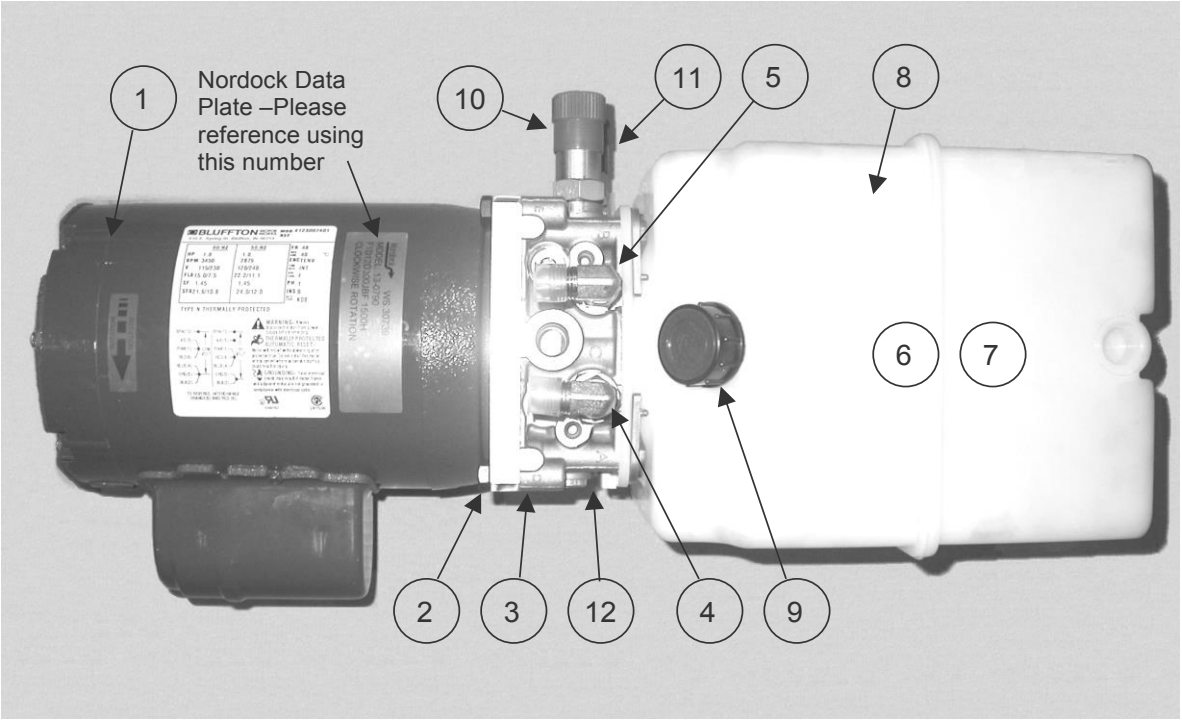

Item	Qty.	Description / Model		P/N	Note
		Complete Power Pack Assembly (Pts 1-12 below)	115 / 230 V 1 Ph 230 / 460 V 3 Ph 575 V 3 Ph	13-0790 13-0791 13-0792	
Power Pack Components:					
1	1	Drive Motor	115 / 230 v. 1 PH 230 / 460 v. 3 PH 575 v. 3 Ph		1
2	1	Motor Coupler	Standard Duty		
3	1	Manifold Assembly	Standard Duty		
4	1	Hydraulic Fitting, 90° 3/8” FNPT x #6MJIC, Deck Lift Port			
5	1	Hydraulic Fitting, 90° 3/8” FNPT x #6MJIC, Lip Ext. Port			
6	1	Pump Assembly (Inside Tank)			
7	1	Oil Pickup Screen and Tube (Inside Tank)			
8	1	Hydraulic Oil Reservoir Kit		13-2824	
9	1	Filler / Vent Cap		13-3596	
10	1	Sequence Valve Cartridge		13-2419	
11	1	Pressure Relief Valve Cartridge		13-3332	
12	1	Flow Control Valve, Adjusting Needle w O-Ring & Nut		13-3341	

Note 1 – Consult factory when ordering individual power pack components.

Section 4 – Hydraulic Cylinders

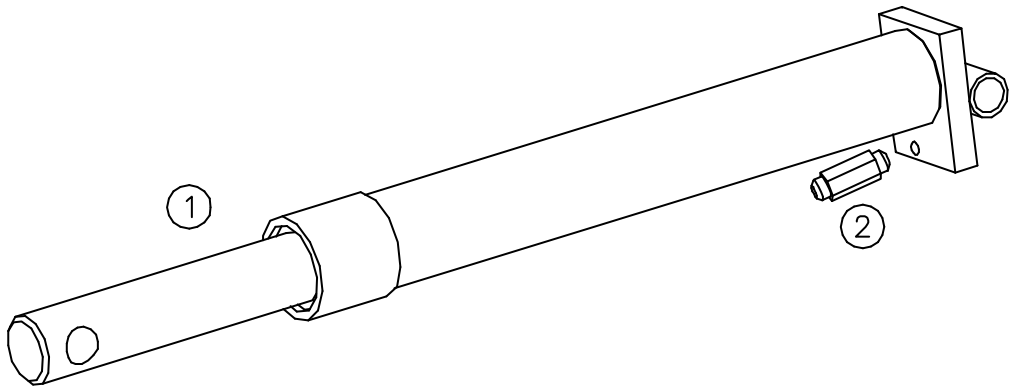

Item	Qty.	Description	Dock Length	Stroke	Closed Length	P/N	Note
1	1	Deck Lift Cylinder, 2” Diameter, 20-50K	6’ 8’ 10’	17” 17” 20”	25” 25” 28”	C1-0011 C1-0011 C1-0030	
	1	Seal Kit, 2”	All			C3-0020	
2	1	Velocity Fuse, 3 gpm.				13-0306	

Section 5 – Hydraulic Lines and Fittings

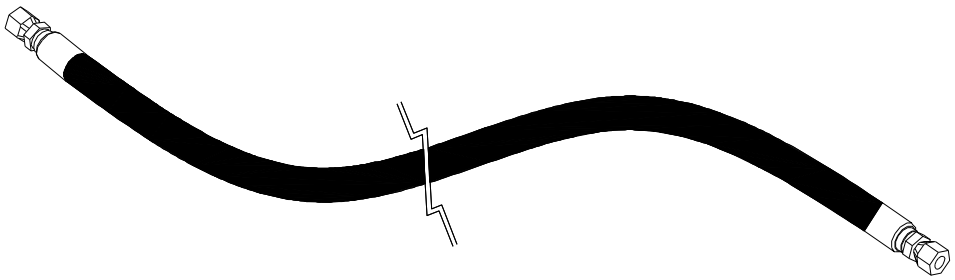

Dock length	Dia.	Description / Model	P/N	Note
6’	3/8”	Deck Lift Hose Assembly, x 72” long Lip Hose Assembly, ……. x 48” long Hose kit, consisting of 1 each above hoses	42-0383 42-0386 13-1678	1
8’	3/8”	Deck Lift Hose Assembly, x 75” long Lip Hose Assembly, ……. x 54” long Hose kit, consisting of 1 each above hoses	42-0384 42-0387 13-1677	1
10’	3/8”	Deck Lift Hose Assembly, x 87” long Lip Hose Assembly, ……. x 78” long	42-0385 42-0388	1
Optional Emergency Stop:				
All	3/8”	Hose Assembly, Power Unit to Valve, x 18” long	13-3370	
All	3/8”	Hose Assembly, Deck Lift, x 72” long	42-0383	
Optional Remote Mount Power Pack, standard length:				
All	3/8”	Hose Assembly, Deck Lift & Lip, x 25’-0” long (2 hoses required per dock, #6 with 1-End Straight, 1-End 90)	13-3667	

Note 1: All hoses are #6 with 2 straight FJIC ends

Section 6 – Optional Equipment

Lip Extend/Emergency Stop Valve:

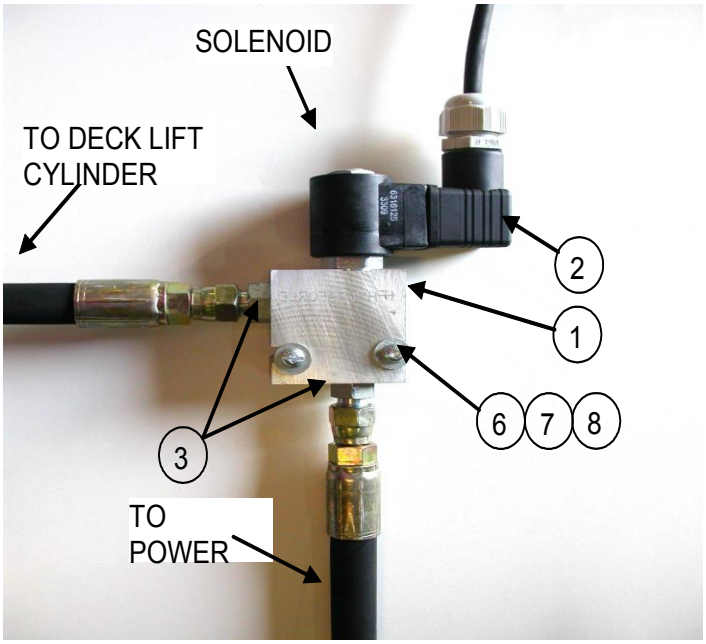

Item	Qty.	Description / Location		P/N	Note
1	1	Solenoid Valve / Rear Frame Brace	Complete Assembly	13-0826 13-0595	
2	1	Receptacle, solenoid valve, Hershman		13-2371	
3	2	Hydraulic Fitting, Str. #6 JICM / 9/16 M ORB		13-0609	
4	1	Pushbutton / Control Panel, Lip Extend (not shown)		13-0317	
5	1	Mushroom Pushbutton, / Control Panel, Emergency Stop Button (not shown)		13-0318	
6	2	Screw, #10-24 x 1 ½" long, plated, combo head		13-0274	
7	2	Washer, Lock, #10, plated		13-0948	
8	2	Washer, Flat, #10, plated		13-1956	

Note: See Section 5 for the hydraulic lines required for the Lip Extend/Emergency Stop valve.

Other Options:

Option	Qty.	Description / Location	P/N	Note
Auto Return	1 1 1	Limit Switch / Located on Frame Rail Timer / Control Panel On / Off Selector / Control Panel	13-0298 13-0156 13-0316	
Bumpers	2	Standard Bumper, AF410-11	61-0001	1
Weather Seals	6' 8' 10'	Brush Seal and Mounting Extrusion Kit Brush Seal and Mounting Extrusion Kit Brush Seal and Mounting Extrusion Kit, (3 pc)	61-0025 61-0024 61-0024	
Dock Store	1	Limit Switch / Located on Frame Rail	13-0298	
Remote Mount Power Pack	1 4 4 4 4	Wall Mount Bracket Bolt, Hex, 1/4" – 20 UNC x 1" Nut, 1/4" – 20 UNC, Plated Washer, 1/4" SAE Flat Washer, 1/4" Lock	43-0428 13-0623 13-0334 13-0272 13-0335	

Note 1 – For custom bumper sizes and applications, please contact your nearest Nordock representative or call 1-866-885-4276.

Section 7 – Control Panels

Volts/Ph.	Description / Style	P/N	Note
115/1/60	Standard Panel / Single Pushbutton	48-0027	
	2 Button – Deck Raise and On/Off Switch	13-1980	
	3 Button – Deck Raise, Lip Extend, and Emergency Stop	13-1132	
	4 Button – Deck Raise, On/Off Switch, Lip Extend and Emergency Stop	13-1350	
208/1/60	Standard Panel / Single Pushbutton	48-0012	
	2 Button – Deck Raise and On/Off Switch		
	3 Button – Deck Raise, Lip Extend, and Emergency Stop	13-2625	
	4 Button – Deck Raise, On/Off Switch, Lip Extend and Emergency Stop	13-3017	
230/1/60	Standard Panel / Single Pushbutton	48-0012	
	2 Button – Deck Raise and On/Off Switch	13-3224	
	3 Button – Deck Raise, Lip Extend, and Emergency Stop	13-2626	
	4 Button – Deck Raise, On/Off Switch, Lip Extend and Emergency Stop	13-1982	
208/3/60	Standard Panel / Single Pushbutton	48-0024	
	2 Button – Deck Raise and On/Off Switch	13-1983	
	3 Button – Deck Raise, Lip Extend and Emergency Stop	13-2402	
	4 Button – Deck Raise, On/Off Switch, Lip Extend and Emergency Stop	13-1243	
230/3/60	Standard Panel / Single Pushbutton	48-0024	
	2 Button – Deck Raise and On/Off Switch	13-1983	
	3 Button – Deck Raise, Lip Extend and Emergency Stop	13-2382	
	4 Button – Deck Raise, On/Off Switch, Lip Extend and Emergency Stop	13-3574	
460/3/60	Standard Panel / Single Pushbutton	48-0020	
	2 Button – Deck Raise and On/Off Switch	13-1155	
	3 Button – Deck Raise, Lip Extend and Emergency Stop	13-2500	
	4 Button – Deck Raise, On/Off Switch, Lip Extend and Emergency Stop	13-2426	
575/3/60	Standard Panel / Single Pushbutton	48-0023	
	2 Button – Deck Raise and On/Off Switch	13-1154	
	3 Button – Deck Raise, Lip Extend and Emergency Stop	43-0261	
	4 Button – Deck Raise, On/Off Switch, Lip Extend and Emergency Stop	13-3784	

NORDOCK®

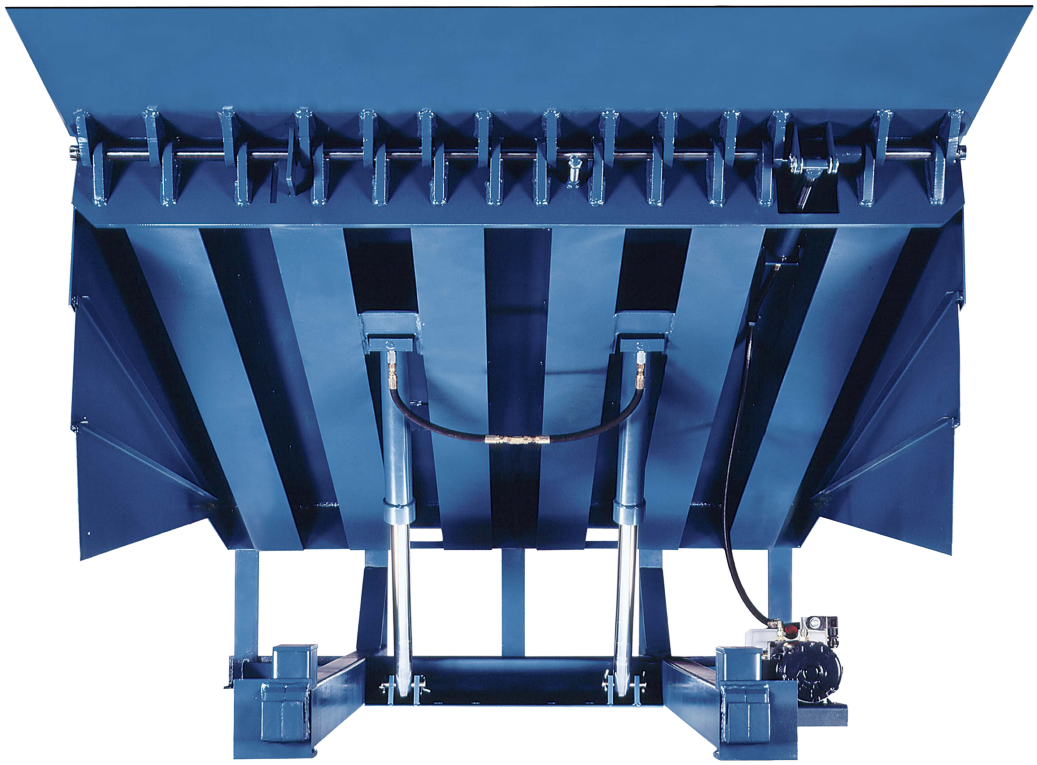

Hydraulic Dock Leveler
SUPER-DUTY™ Series
Model (SD)
60,000 to 160,000 lbs. Capacity

Parts Manual

This manual applies to dock levelers manufactured on or after
February 2017, with Serial Numbers 37900 and greater.

P/N: 49-0177-E

NORDOCK INC.
Website: nordockinc.com ~ Email: sales@nordockinc.com ~ Toll free: 866-885-4276
Nordock Incorporated reserves the right to make changes to specifications without notice or obligation.
Nordock products may be covered by various U.S. and foreign patents or pending applications.

Parts and Service Tables

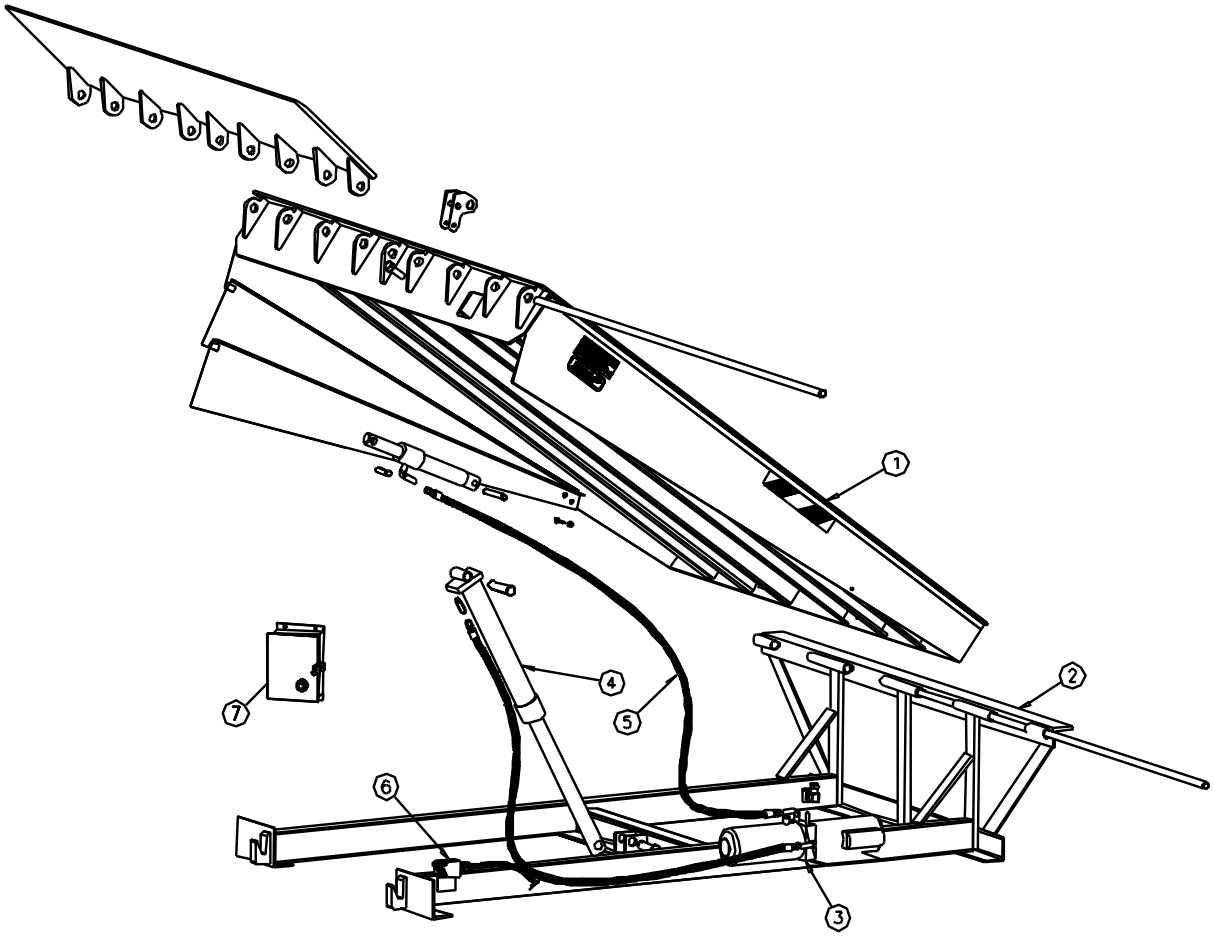

Item Number/ Section	Description
1	Deck and Lip Assembly
2	Frame Assembly
3	Power Pack and Related Hydraulic Components
4	Hydraulic Cylinders
5	Hydraulic Lines and Fittings
6	Optional Equipment
7	Control Panel

Note: Not all parts and weldments are noted in this manual. Only those that are serviceable and /or replaceable will be listed. For additional information on those parts not included in this manual, please contact Nordock Inc. Remember to make note of the model and serial number of the unit for accurate parts and service.

Section 1 – Deck and Lip Assembly

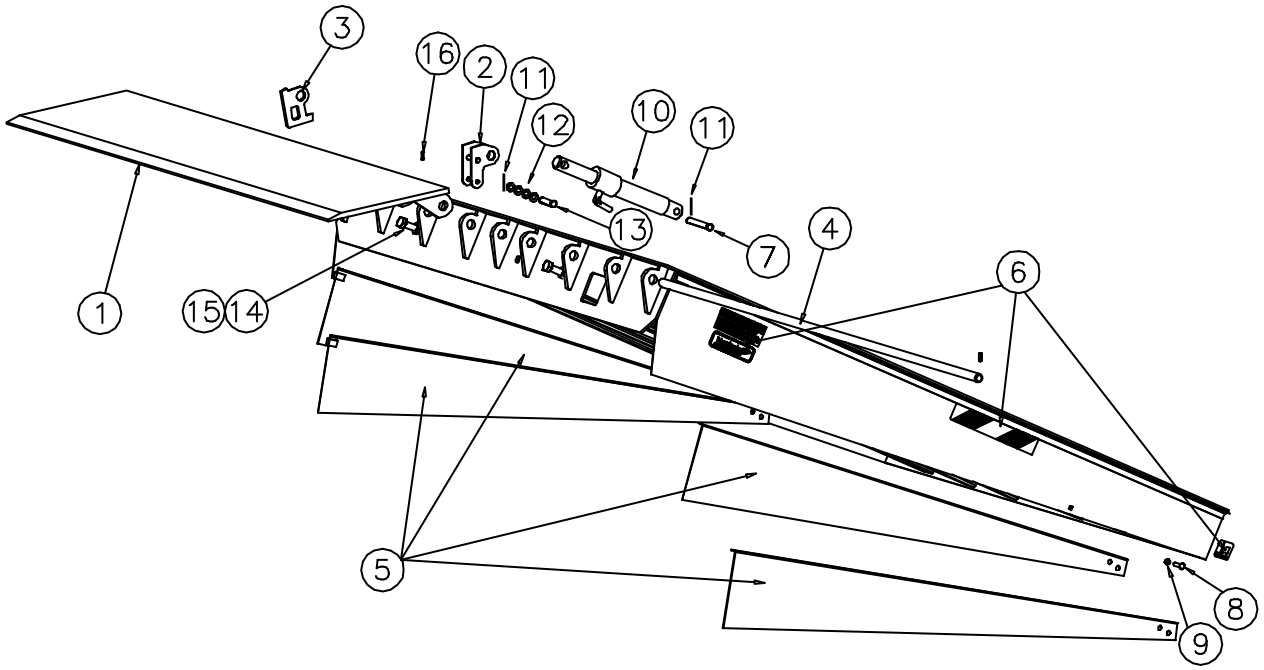

Item	Qty.	Description / Model						P/N	Note
1	1	Lip Weldment		60K	80K	100K	120K	160K	1
		6’	16”	42-1402	42-0340	42-0930	42-1375		
			18”	42-1403	42-0341	42-0931	42-1376		
			20”	42-1404	42-0342	42-0932	42-1377		
		6.5’	16”	42-1242	42-0352	42-1239			
			18”	42-1243	42-0353	42-1240			
			20”	42-1244	42-0354	42-1241			
		7’	16”	42-1483	42-0364	42-1236	42-1491		
			18”	42-1484	42-0365	42-1237	42-1492		
			20”	42-1485	42-0016	42-1238	42-1493		
		7’T	16”	42-1455	42-0375	42-1216	42-1540		
			18”	42-1456	42-0376	42-1217	42-1541		
			20”	42-1457	42-0377	42-1218	42-1542		
		70”	16”		42-0523	42-1242			
			18”		42-0524	42-1243			
			20”		42-0525	42-1244			
2	1	Lip Cam Weldment, 60-100K Docks Lip Cam Weldment, 120-160K Docks						42-0738 42-1334	
3	1	Lip Safety Lock Lug, 60-100K Docks Lip Safety Lock Lug, 120-160K Docks						43-0452 43-0776	

Item	Qty.	Description / Model		P/N	Note
4	1	Hinge Rod	6’ Wide Docks, 60K	43-0151	
			6.5’ Wide Docks, 60K	43-0152	
			7’ Wide Docks, 60K	43-0153	
			6’ Wide Docks, 80-100K	43-0691	
			6.5’ Wide Docks, 80-100K	43-0692	
			7’ Wide Docks, 80-100K	43-0693	
			6’ Wide Docks, 120-160K	43-0812	
			6.5’ Wide Docks, 120-160K	43-0813	
			7’ Wide Docks, 120-160K	43-0814	
5	1	Telescoping Side Skirt Kit – 6’		42-0393	
	1	Telescoping Side Skirt Kit – 8’		42-0394	
	1	Telescoping Side Skirt Kit – 10’		42-0395	
6	1	Dock Leveler Decal Kit		42-0392	2
7	1	Cylinder Mount Pin, Clevis Pin 1/2” x 4 1/2” Long		13-3672	
		Optional: St. St. 1/2” x 4 7/8” Long		43-1026	
8	2	Bolt, 3/8” - 16 UNC x 1 1/4" Carriage Head		13-0122	
9	2	Nut, 3/8" - 16 Grade 5, Nylock		13-0707	
10	1	Lip Cylinder, 1 1/2” dia.	60-120K Docks	C1-0009	
		Lip Cylinder, 2” dia.	160K Docks	C1-0010	
	1	Seal Kit, 1 1/2”, dia.	60-120K Docks	C3-0025	
		Seal Kit, 2”, dia.	160K Docks	C3-0020	
11	2	Cotter Pin, 1/8” x 1”		13-0171	
12	4	Washer, 1/2" Flat		13-0267	
13	1	Clevis Pin, 1/2" x 3 1/2", plated		13-0399	
		Optional St St Pin, ½” x 4”		43-1025	
14	2	Nut, Hex 5/8”-11NC, plated		13-0289	
15	2	Bolt, Hex 5/8”-11NC x 4”, thread full length	60-80K Docks	13-0302	
		Bolt, Hex 5/8”-11NC x 6”, thread full length	100-160K Docks	13-2112	
16	2	1/4” x 2” Roll Pin		13-0555	

Note 1 – Consult factory when ordering replacement lip weldments.
Note 2 – For correct decal placement, see safety section.

Section 2(a) – 60K Frame

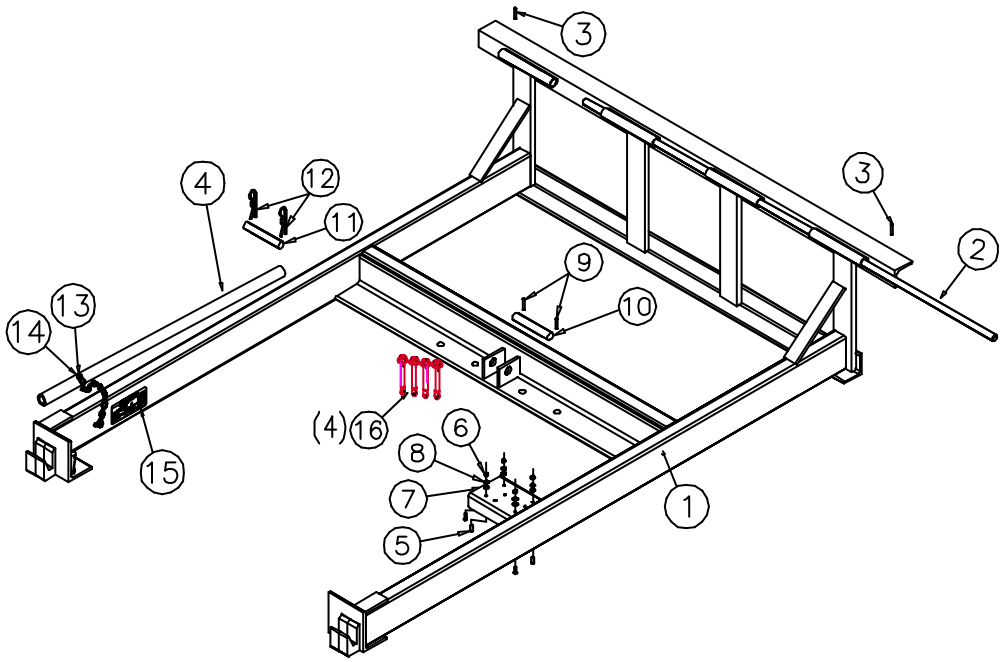

Item	Qty.	Description / Model		P/N 19" Frame	P/N 23" Frame	Note
1	1	Frame Weldment 60K	6 X 6	42-3300	42-3309	
			6 X 8	42-3301	42-3310	
			6 X 10	42-3302	42-3311	
			6.5 X 6	42-3303	42-3312	
			6.5 X 8	42-3304	42-3313	1
			6.5 X 10	42-3305	42-3314	
			7 X 6	42-3306	42-3315	
			7 X 8	42-3307	42-3316	
			7 X 10	42-3308	42-3317	
2	1	Hinge Rod, Rear	6' Wide Docks		43-0447	
			6.5' Wide Docks		43-0448	
			7' Wide Docks		43-0449	
3	2	1/4" x 2" Roll Pin			13-0555	
4	1	Maintenance / Support Stand			43-0262	
5	4	Bolt, Hex, 1/4"-20 UNC x 1, plated			13-0623	
6	4	Nut, 1/4"-20 UNC, Plated			13-0334	
7	4	Washer, Flat 1/4" SAE			13-0272	
8	4	Washer, Lock 1/4"			13-0335	
9	2	Cotter Pin, 1/4" x 1 3/4"			13-0992	
10	1	Lower Cylinder Mount Pin, 5 ¼" long			43-0311	
		Optional St. St. Pin			43-1035	
11	1	Upper Cylinder Mount Pin, 6 ¾" long			43-0310	
		Optional St. St. Pin			43-1027	
12	2	Hairpin Cotter, 7/8" Eye x 4" Long, Plated			13-3579	
13	1	Washer, ¼" Fender, Plated			13-0271	
14	1	Screw, ¼" -14 x 1, Tek, Hex Head, plated			13-0273	
15	1	Decal, Dock leveler, Lock-Out Tag-Out			43-1287	
16	4	Anchor, Wedge, ¾" x 5 ½" long, plated			13-4569	

Note 1 – The standard Rear Frame angle width is 4". Angle widths may vary to suit pit length. Please consult factory when ordering replacement frames.

Section 2(b) – 80-100K Frame

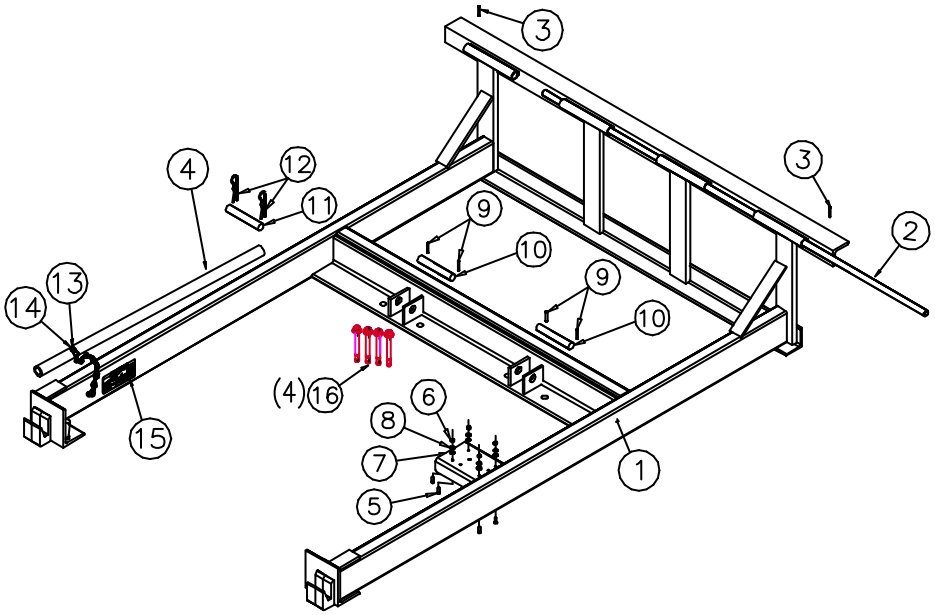

Item	Qty.	Description / Model		P/N 19" Frame	P/N 23" Frame	Note
1	1	Frame Weldment 80-100K	6 X 6	42-3327	42-3336	
			6 X 8	42-3328	42-3337	
			6 X 10	42-3329	42-3338	
			6.5 X 6	42-3330	42-3339	1
			6.5 X 8	423331	42-3340	
			6.5 X 10	42-3332	42-3341	
			7 X 6	42-3333	42-3342	
			7 X 8	42-3334	42-3343	
			7 X 10	42-3335	42-3344	
2	1	Hinge Rod, Rear	6' Wide Docks		43-0447	
			6.5' Wide Docks		43-0448	
			7' Wide Docks		43-0449	
3	2	1/4" x 2" Roll Pin			13-0555	
4	1	Maintenance / Support Stand			43-0262	
5	4	Bolt, Hex, 1/4"-20 UNC x 1, plated			13-0623	
6	4	Nut, 1/4"-20 UNC, Plated			13-0334	
7	4	Washer, Flat 1/4" SAE			13-0272	
8	4	Washer, Lock 1/4"			13-0335	
9	4	Cotter Pin, 1/4" x 1 3/4"			13-0992	
10	2	Lower Cylinder Mount Pin, 4 1/2" long Optional St St Pin			43-0312 43-1028	
11	2	Upper Cylinder Mount Pin, 6 ¾" long Optional St St Pin			43-0310 43-1027	
12	4	Hairpin Cotter, 7/8" Eye x 4" Long, Plated			13-3579	
13	1	Washer, ¼" Fender, Plated			13-0271	
14	1	Screw, ¼" -14 x 1, Tek, Hex Head, plated			13-0273	
15	1	Decal, Dock leveler, Lock-Out Tag-Out			43-1287	
16	4	Anchor, Wedge, ¾" x 5 ½" long, plated			13-4569	

Note 1 – The standard Rear Frame angle width is 4". Angle widths may vary to suit pit length. Please consult factory when ordering replacement frames.

Section 2(c) – 120-160K Frame

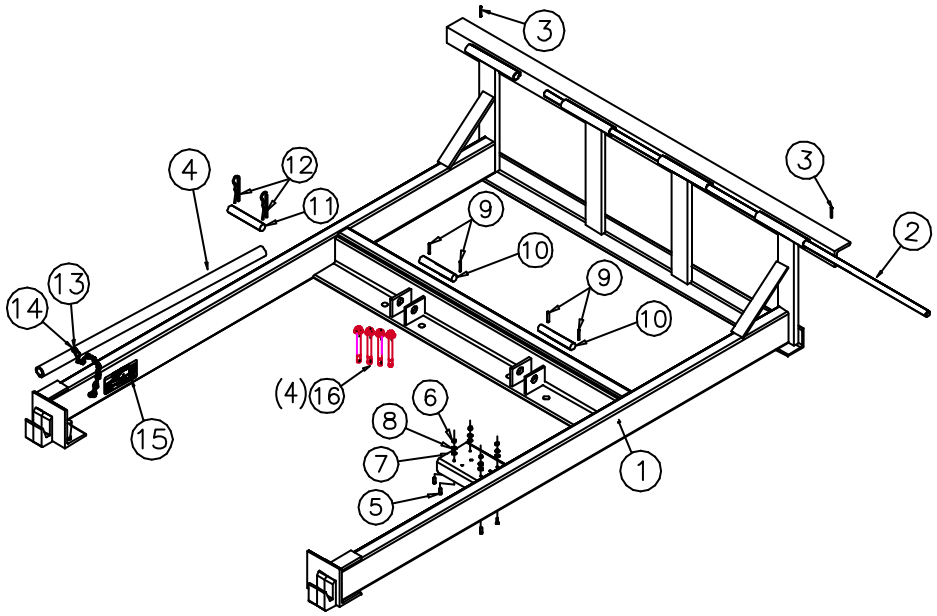

Item	Qty.	Description / Model		P/N 19" Frame	P/N 23" Frame	Note
1	1	Frame Weldment 120K	6 X 6 6 X 8 6 X 10	42-3520 42-3521 42-3522	42-3529 42-3530 42-3531	1
			6.5 X 6 6.5 X 8 6.5 X 10	42-3523 42-3524 42-3525	42-3532 42-3533 42-3534	
			7 X 6 7 X 8 7 X 10	42-3526 42-3527 42-3528	42-3535 42-3536 42-3537	
2	1	Hinge Rod, Rear	6' Wide Docks 6.5' Wide Docks 7' Wide Docks		43-1169 43-1170 43-1171	
3	2	1/4" x 2" Roll Pin			13-0555	
4	1	Maintenance / Support Stand			43-0262	
5	4	Bolt, Hex, 1/4"-20 UNC x 1, plated			13-0623	
6	4	Nut, 1/4"-20 UNC, Plated			13-0334	
7	4	Washer, Flat 1/4" SAE			13-0272	
8	4	Washer, Lock 1/4"			13-0335	
9	4	Cotter Pin, 1/4" x 1 3/4"			13-0992	
10	2	Lower Cylinder Mount Pin, 4 1/2" long Optional St St Pin			43-0312 43-1028	
11	2	Upper Cylinder Mount Pin, 6 ¾" long Optional St St Pin			43-0310 43-1027	
12	4	Hairpin Cotter, 7/8" Eye x 4" Long, Plated			13-3579	
13	1	Washer, ¼" Fender, Plated			13-0271	
14	1	Screw, ¼" -14 x 1, Tek, Hex Head, plated			13-0273	
15	1	Decal, Dock leveler, Lock-Out Tag-Out			43-1287	
16	4	Anchor, Wedge, ¾" x 5 ½" long, plated			13-4569	

Note 1 – The standard Rear Frame angle width is 4". Angle widths may vary to suit pit length. Please consult factory when ordering replacement frames.

Section 3 – Power Pack and Related Hydraulic Components

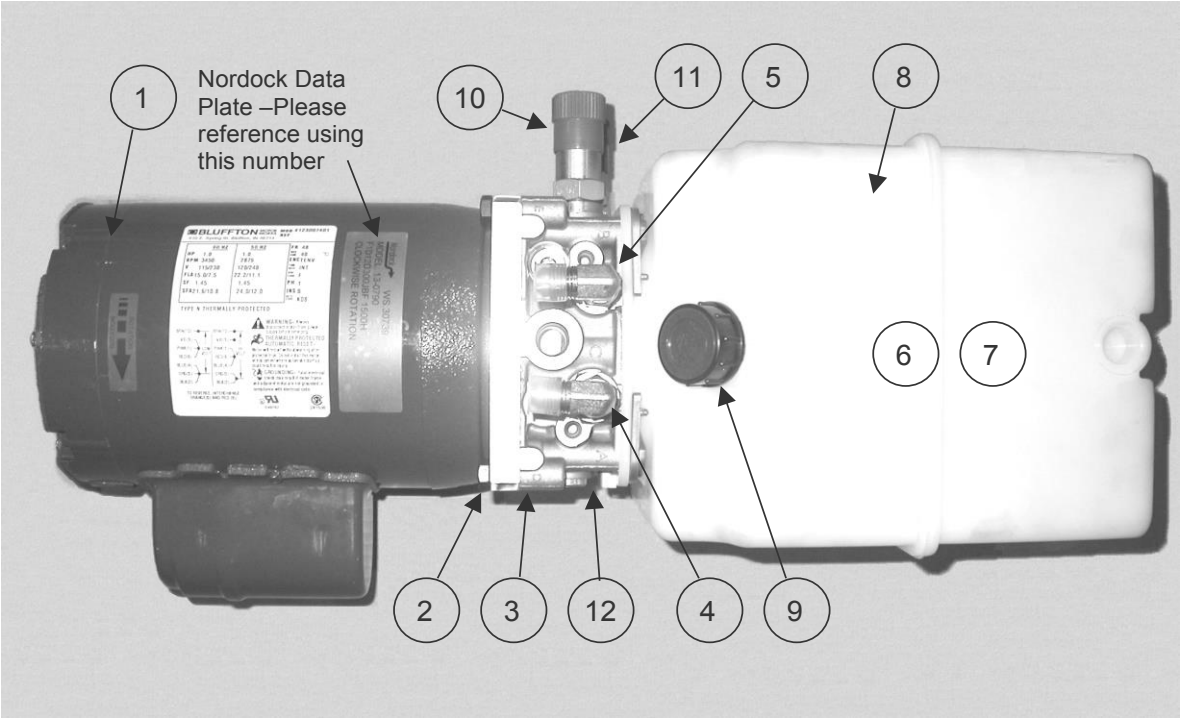

Item	Qty.	Description / Model		P/N	Note
		Complete Power Pack Assembly (Pts 1-12 below)	115 / 208 / 230 V 1 Ph 208 / 230 / 460 V 3 Ph 575 V 3 Ph	13-0793 13-0794 13-0795	
Power Pack Components:					
1	1	Drive Motor	115 / 230 v. 1 PH 230 / 460 v. 3 PH 575 v. 3 Ph		1
2	1	Motor Coupler			
3	1	Manifold Assembly	Super Duty		
4	1	Hydraulic Coupler, 90° 3/8” NPT to #6 JMIC, Deck Lift Port			
5	1	Hydraulic Coupler, 90° 3/8” NPT to #6 JMIC, Lip Extend Port			
6	1	Pump Assembly (Inside Tank)			
7	1	Oil Pickup Screen and Tube (Inside Tank)			
8	1	Hydraulic Oil Reservoir		13-2824	
9	1	Filler / Vent Cap		13-3596	
10	1	Sequence Valve Cartridge		13-2419	
11	1	Pressure Relief Valve Cartridge		13-3332	
12	1	Flow Control Valve, Adjusting Needle w O-Ring & Nut		13-3341	

Note 1 – Consult factory when ordering individual power pack components.

Section 4 – Hydraulic Cylinders

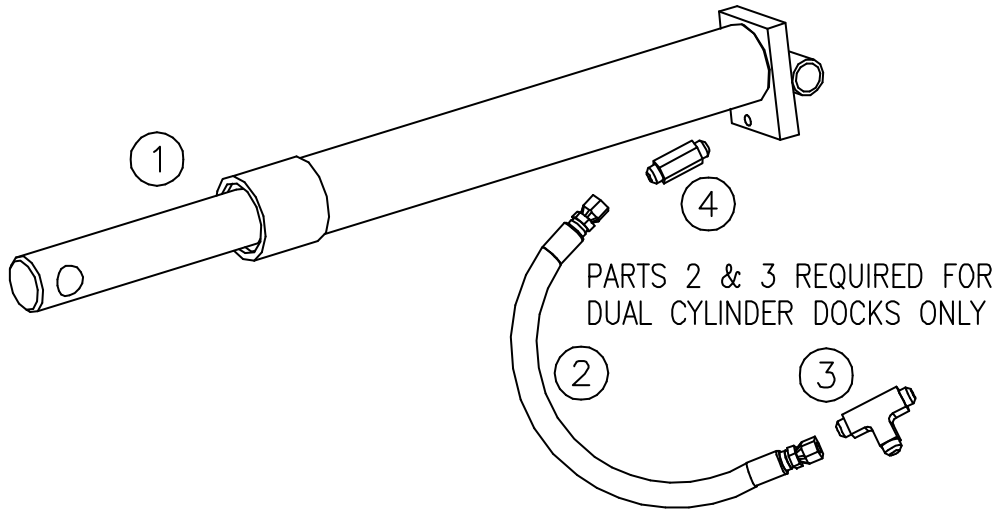

Item	Qty.	Description	Capacity	Dock Length	Stroke	P/N	Note
1	1	Deck Lift Cylinder, 3" Diameter	60K, 160K	6' 8' 10'	17" 17" 20"	C1-0007 C1-0007 C1-0008	1
	1	Seal Kit, 3"	60K, 160K	All		C3-0013	
	2	Deck Lift Cylinder, 2" Diameter	80-120K	6' 8' 10'	17" 17" 20	C1-0011 C1-0011 C1-0030	2
	2	Seal Kit, 2"	80-120K	All		C3-0020	
2	2	Hose, required for Dual cylinder docks only, #6 with 2 straight FJIC ends		80-120K Dock x 15" lg. 160K Dock x 20" lg.		42-3817 42-3818	
3	1	Tee Fitting (dual cylinder docks only), #6 JIC				13-0185	
4	A/R	Velocity Fuse (1 required per cylinder)		80-120K Docks, 3 gpm 60K, 160K Docks, 10 gpm		13-0306 13-0307	

Note 1: 160K Dock uses 2-3" Dia. Cylinders **Note 2:** 80K to 120K Docks use 2-2" Dia. Cylinders

Section 5 – Hydraulic Lines and Fittings

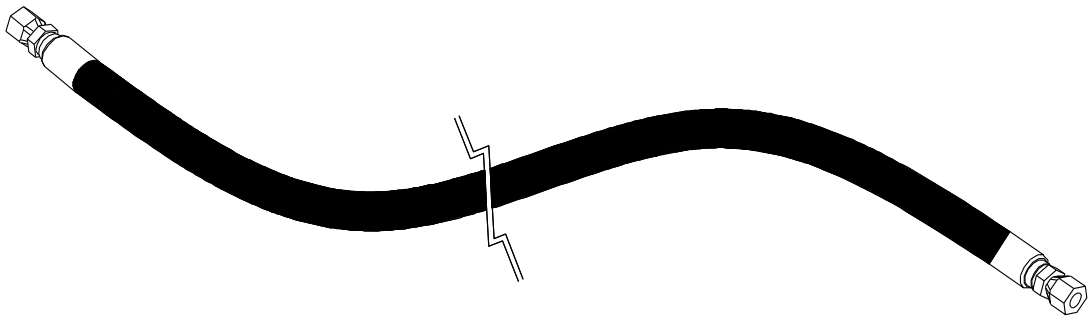

Dock length	Dia.	Description / Model	P/N	Note
6’	3/8”	Deck Lift, x 72” long Lip, ……. x 48” long Hose kit, consisting of 1 each above hoses	42-0383 42-0386 13-1678	1
8’	3/8”	Deck Lift, x 75” long Lip, ……. x 54” long Hose kit, consisting of 1 each above hoses	42-0384 42-0387 13-1677	1
10’	3/8”	Deck Lift, x 87” long Lip, ……. x 78” long	42-0385 42-0388	1
Optional Emergency Stop:				
All	3/8”	Hose, Power Unit to Valve, x 18” long	13-3370	1
Optional Remote Mount Power Pack, standard length:				
All	3/8”	Hose, Deck Lift & Lip, x 20’-0” long (2 hoses)	42-1545	1

Note 1: All hoses are #6 with 2 straight FJIC ends

Section 6 – Optional Equipment

Lip Extend/Emergency Stop Valve:

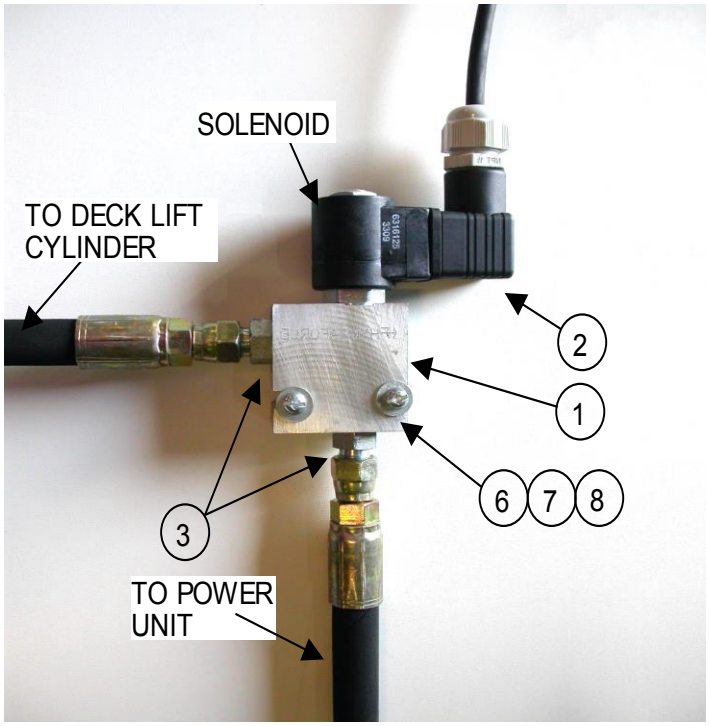

Item	Qty.	Description / Location		P/N	Note
1	1	Solenoid Valve / Rear Frame Brace	Complete Assembly Solenoid only	13-0826 13-0595	
2	1	Receptacle, solenoid valve, Hershman		13-2371	
3	2	Hydraulic Fitting, Str. #6 JICM / 9/16 M ORB		13-0609	
4	1	Pushbutton / Control Panel, Lip Extend (not shown)		13-0317	
5	1	Mushroom Pushbutton, / Control Panel, Emergency Stop Button (not shown)		13-0318	
6	2	Screw, #10-24 x 1 ½” long, plated, combo head		13-0274	
7	2	Washer, Lock, #10, plated		13-0948	
8	2	Washer, Flat, #10, plated		13-1956	

Note: See Section 5 for the hydraulic lines required for the Lip Extend/Emergency Stop valve.

Other Options:

Option	Qty.	Description / Location	P/N	Note
Auto Return	1 1 1	Limit Switch / Located on Frame Rail Timer / Control Panel On / Off Selector / Control Panel	13-0298 13-0156 13-0316	
Bumpers	2	Standard Bumper, AF410-11	61-0001	1
Weather Seals	6' 8' 10'	Brush Seal and Mounting Extrusion Kit Brush Seal and Mounting Extrusion Kit Brush Seal and Mounting Extrusion Kit, (3 pc)	61-0025 61-0024 61-0024	
Remote Mount Power Pack	1 4 4 4 4	Wall Mount Bracket Bolt, Hex, 1/4" – 20 UNC x 1" Nut, 1/4" – 20 UNC, Plated Washer, 1/4" SAE Flat Washer, 1/4" Lock	43-0428 13-0623 13-0334 13-0272 13-0335	

Note 1 – For custom bumper sizes and applications, please contact your nearest Nordock representative or call 1-866-885-4276.

Section 7 – Control Panels

Volts/Ph	Description / Style	P/N	Note
115/1/60	Standard Panel / Single Pushbutton	48-0027	
	2 Button – Deck Raise and On/Off Switch	13-1980	
	3 Button – Deck Raise, Lip Extend, and Emergency Stop	13-1132	
	4 Button – Deck Raise, On/Off Switch, Lip Extend and Emergency Stop	13-1350	
230/1/60	Standard Panel / Single Pushbutton	13-2838	
	2 Button – Deck Raise and On/Off Switch	13-3224	
	3 Button – Deck Raise, Lip Extend, and Emergency Stop	13-2626	
	4 Button – Deck Raise, On/Off Switch, Lip Extend and Emergency Stop	13-1982	
208/3/60	Standard Panel / Single Pushbutton	13-2487	
	2 Button – Deck Raise and On/Off Switch	13-1983	
	3 Button – Deck Raise, Lip Extend and Emergency Stop	13-2402	
	4 Button – Deck Raise, On/Off Switch, Lip Extend and Emergency Stop	13-1243	
230/3/60	Standard Panel / Single Pushbutton	13-3484	
	2 Button – Deck Raise and On/Off Switch	13-1983	
	3 Button – Deck Raise, Lip Extend and Emergency Stop	13-2382	
	4 Button – Deck Raise, On/Off Switch, Lip Extend and Emergency Stop	13-3574	
460/3/60	Standard Panel / Single Pushbutton	13-2816	
	2 Button – Deck Raise and On/Off Switch	13-1155	
	3 Button – Deck Raise, Lip Extend and Emergency Stop	13-2500	
	4 Button – Deck Raise, On/Off Switch, Lip Extend and Emergency Stop	13-2426	
575/3/60	Standard Panel / Single Pushbutton	13-1045	
	2 Button – Deck Raise and On/Off Switch	13-1154	
	3 Button – Deck Raise, Lip Extend and Emergency Stop	43-0261	
	4 Button – Deck Raise, On/Off Switch, Lip Extend and Emergency Stop	13-3784	

Note 1 – 3 Phase Panels have a reduced voltage secondary to 120V

NORDOCK®



Hydraulic Dock Leveler
DUAL-DUTY™ Series

Model (ND)

20,000 to 50,000 lbs. Capacity

Parts Manual

This Manual applies to all models produced after 2018/09/20
with Serial number(s) SN44064 and greater.

P/N: 49-0171-F

NORDOCK INC.
Website: nordockinc.com ~ Email: sales@nordockinc.com ~ Toll free: 866-885-4276
Nordock Inc. reserves the right to make changes to specifications without notice or obligation. Nordock products may be covered by various U.S. and foreign patents or pending applications.

Parts and Service Table

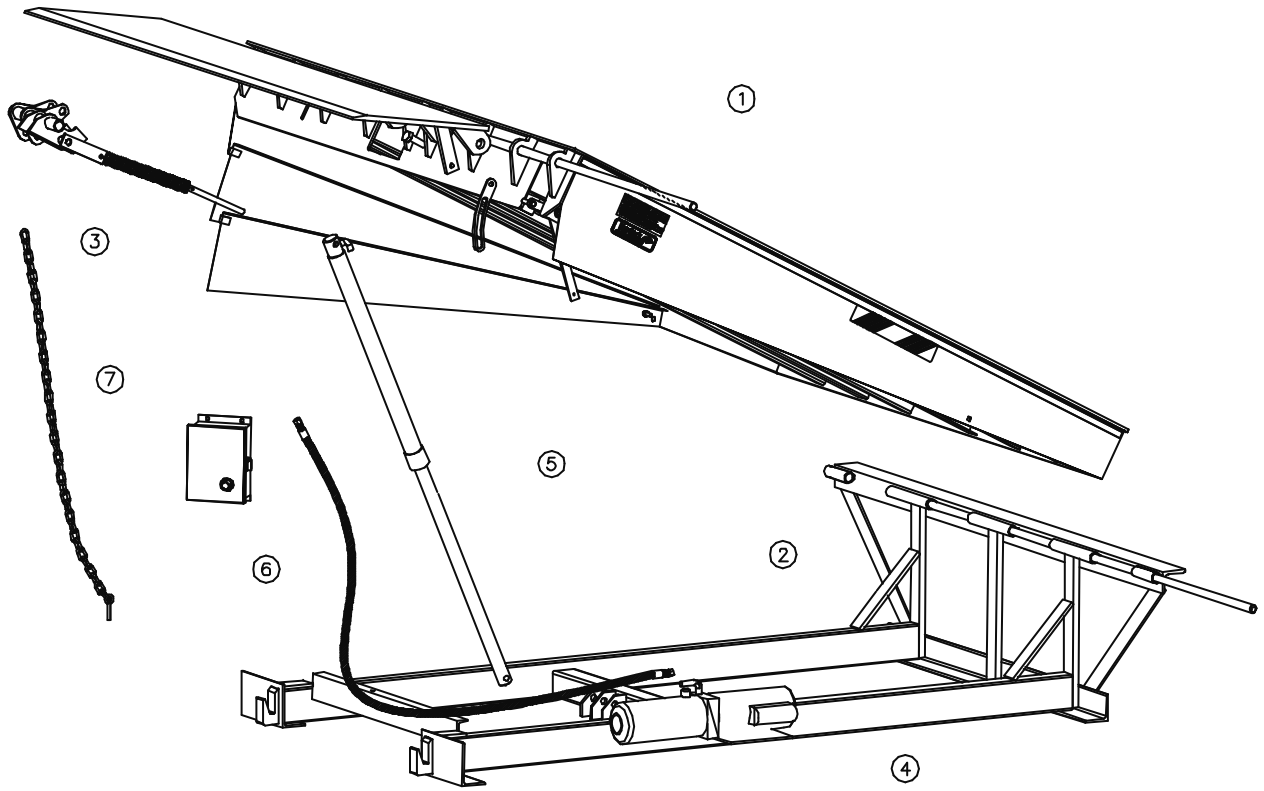

Item Number/ Section	Description
1	Deck and Lip Assembly
2	Frame Assembly
3	Lip Extension Mechanism Power
4	Pack and Related Hydraulic Components
5	Hydraulic Cylinders
6	Hydraulic Lines and Fittings
7	Control Panel

Note: Not all parts and weldments are noted in this manual. Only those that are serviceable and /or replaceable will be listed. For additional information on those parts not included in this manual, please contact Nordock. Remember to make note of the model and serial number of the unit for accurate parts and service.

Section 1 – Deck and Lip Assembly

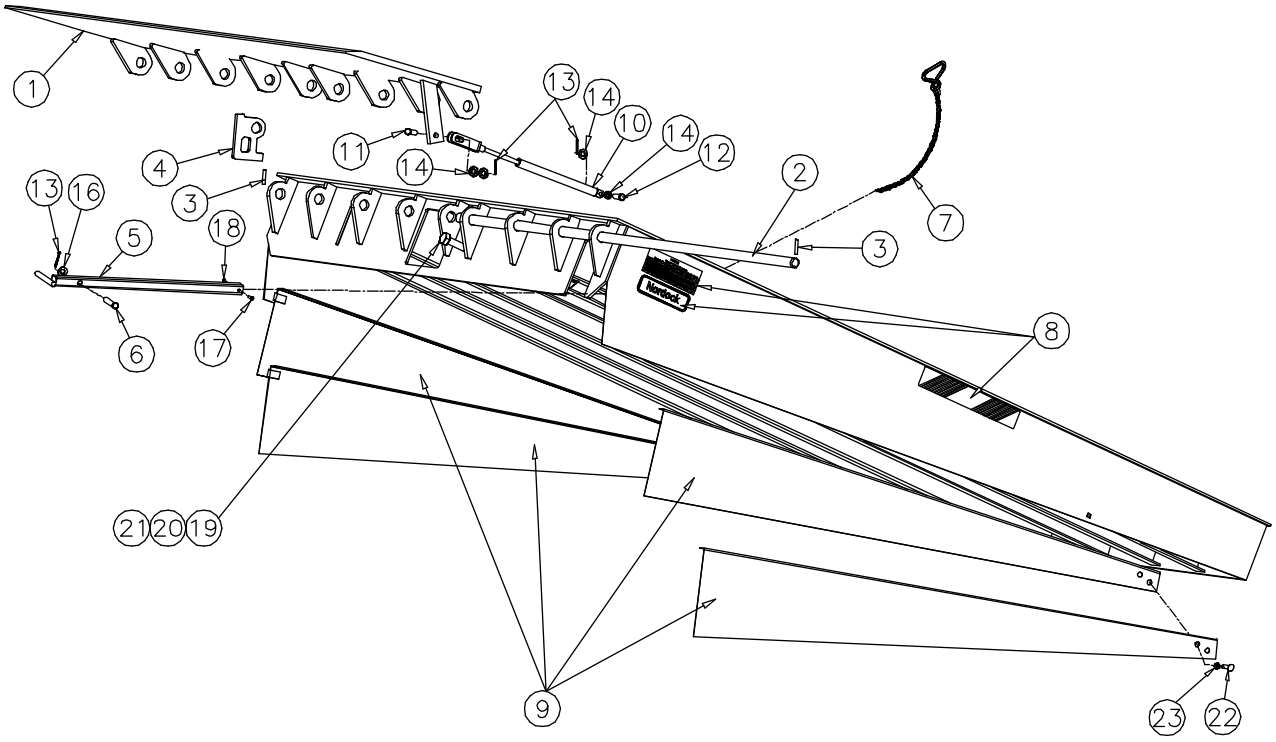

Item	Qty.	Description / Model							Note
1	1	Lip Weldment							
		Capacity	Length	P/N					
				6’	6.5’	7’	7’T	70”	
		20-25K	16”	42-0300	42-0308	42-0317	42-0323	42-0807	
			18”	42-0301	42-0309	42-0318	42-0324	42-0810	
			20”	42-0302	42-0310	42-0319	42-0325	42-0813	
		30-40K	16”	42-0303	42-0311	42-0020	42-0326	42-0808	
			18”	42-0009	42-0312	42-0021	42-0327	42-0811	
			20”	42-0304	42-0313	42-0022	42-0328	42-0814	
		45-50K	16”	42-0305	42-0314	42-0320	42-0329	42-0809	
			18”	42-0306	42-0315	42-0321	42-0330	42-0812	
			20”	42-0307	42-0316	42-0322	42-0331	42-0815	
2	1	Lip Hinge Rod		43-0148	43-0149	43-0150	43-0150	43-0465	

Item	Qty.	Description / Model		P/N	Note
3	2	Roll Pin, ¼" x 2		13-0555	
4	1	Lip Safety Lock Lug		43-0252	
5	1	Below Dock Control Lever – Handle to Lip		42-2016	
6	1	Clevis Pin – Lip Extend, ½" x 2 ¼"		13-0288	
7	1	Below Dock Control Chain – Deck to Handle (9 1/2")		42-1415	
8	1	Dock leveler Decal Kit		42-0392	1
9	1 1 1	Telescoping Side Skirt Kit	6' Long Docks 8' Long Docks 10' Long Docks	42-0393 42-0394 42-0395	
10	A/R	Gas Spring – Lip Extend (Quantity As Required) Gas Spring c/w Clevis End		42-1568	
11	1	Clevis Pin – Gas Spring to Lip ½" x 1 1/4"		13-2111	
12	1	Clevis Pin – Gas Spring to Deck 3/8" x 1 5/8"		13-0500	
13	3	Cotter Pin – 1/8" x 1		13-0171	
14	A/R	Washer, 3/8" SAE Flat		13-0203	
16	1	Washer, 1/2", plated		13-0267	
17	1	Screw, 10-24 x 1" long, plated		13-0841	
18	1	Nut, Nylock, 10-24 plated		13-1858	
19	1	5/8" Dia. Nut, Bolt x 4" Long		13-0302	
20	1	Washer, Lock, 5/8" plated		13-0657	
21	1	Nut, Hex, 5/8"-11NC, 5/8", plated		13-0289	
22	2	Bolt, 3/8" - 16 UNC x 1 1/4" Carriage Head		13-0122	
23	2	Nut, 3/8" - 16 Grade 5, Nylock		13-0707	

Note1 – For correct decal placement, see safety section.

Section 2 – Frame

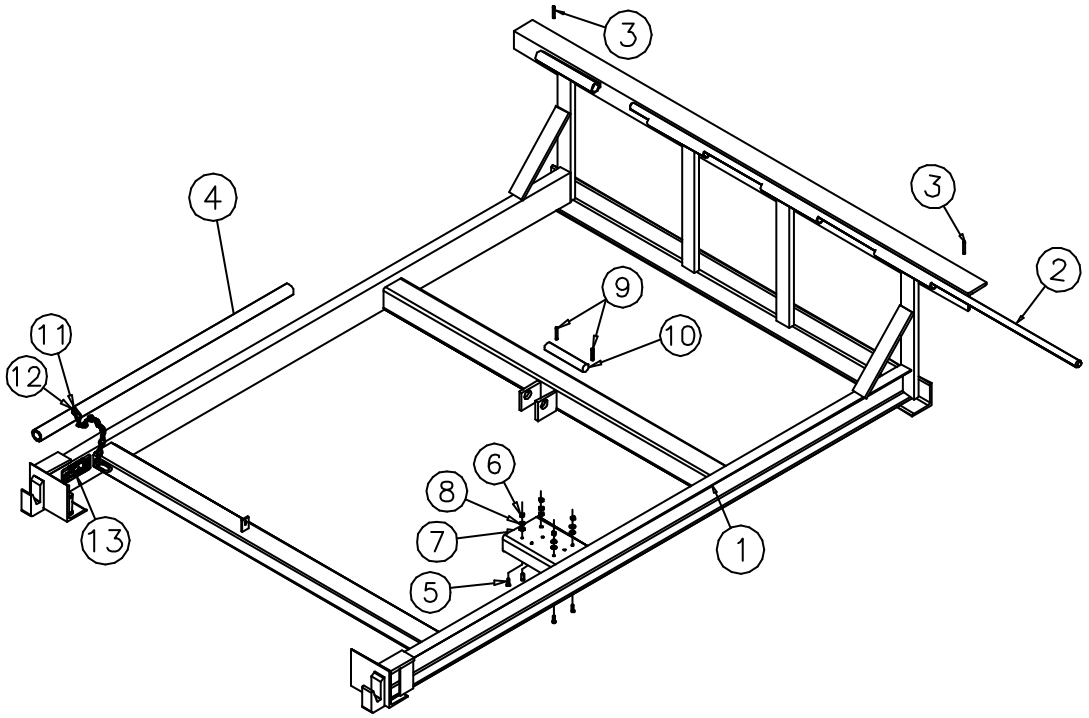

Item	Qty.	Description / Model					P/N	Note
1	1	Frame Weldment 20-40K	Dock Length	P/N- Dock Width				1
				6’	6.5’	7’	70”	
			6’	42-3220	42-3223	42-3226	42-3229	
			8’	42-3221	42-3224	42-3227		
			10’	42-3222	42-3225	42-3228		
		45-50K	6’	42-2473	42-2476	42-2479		
			8’	42-2474	42-2477	42-2480		
			10’	42-2475	42-2478	42-2481		
2	1	Rear Hinge Rod		43-0154	43-0155	43-0156	43-0462	
3	2	1/4" x 2" Roll Pin					13-0555	
4	1	Maintenance / Support Stand					43-0262	
5	4	Bolt, 1/4" - 20 UNC x 1, Plated					13-0623	
6	4	Nut, 1/4" - 20 UNC Plated					13-0334	
7	4	Washer, 1/4" SAE Flat					13-0272	
8	4	Washer, Lock, ¼”, Plated					13-0335	
9	1	Cotter Pin, 3/16" x 1 3/4"					13-0304	
10	1	Lower Cylinder Pin, ¾” dia.					43-0994	
11	1	Washer, ¼” Fender, Plated					13-0271	
12	1	Screw, ¼” -14 x 1, Tek, Hex Head, plated					13-0273	
13	1	Decal, Dock leveler, Lock-Out Tag-Out					43-1287	

Note 1 – The standard Rear Frame angle width is 3”. Widths may vary to suit pit length. Please consult factory when ordering replacement frames.

Note 2 – ND docks use a spacer kit for a 23” frame depth.

Section 3 – Lip Actuator Assembly

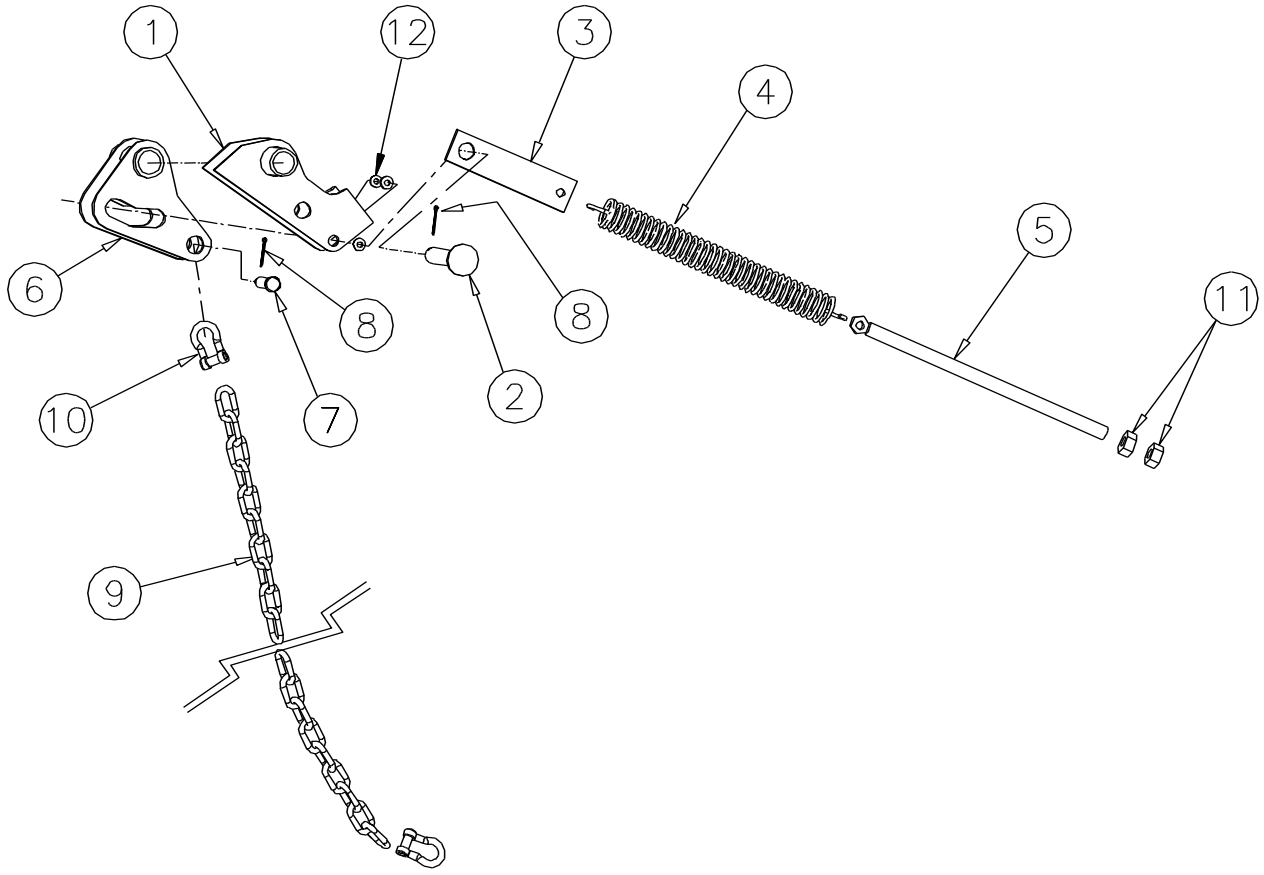

Item	Qty.	Description / Style		P/N	Note
1	1	Lip Cam Weldment		42-0684	
2	1	Pin, Lip Cam, ¾" Dia. x 6"		42-0687	
3	1	Return Spring Mount		43-0256	
4	1	Cam Return Spring, 8" Overall		13-0565	
5	1	Adjuster Rod		42-1443	
6	1	Lip Extend Actuator		42-0685	
7	1	Clevis Pin, 3/4" Dia. x 2" Steel Plated		13-1208	
8	2	Cotter Pin, 3/16" x 1 3/4"		13-0304	
9	1	Actuator Chain	6' Long Dock 8' Long Dock 10' Long Dock	43-0415 43-0415 43-0417	
10	2	Shackle, 5/16" Dia. Forged Steel c/w 5/16" bolt		13-2161	
11	2	Nut, 5/8"-11UNC, plated		13-0289	
12	3	Washer, ¾", plated		13-0649	

Section 4 – Power Pack and Related Hydraulic Components

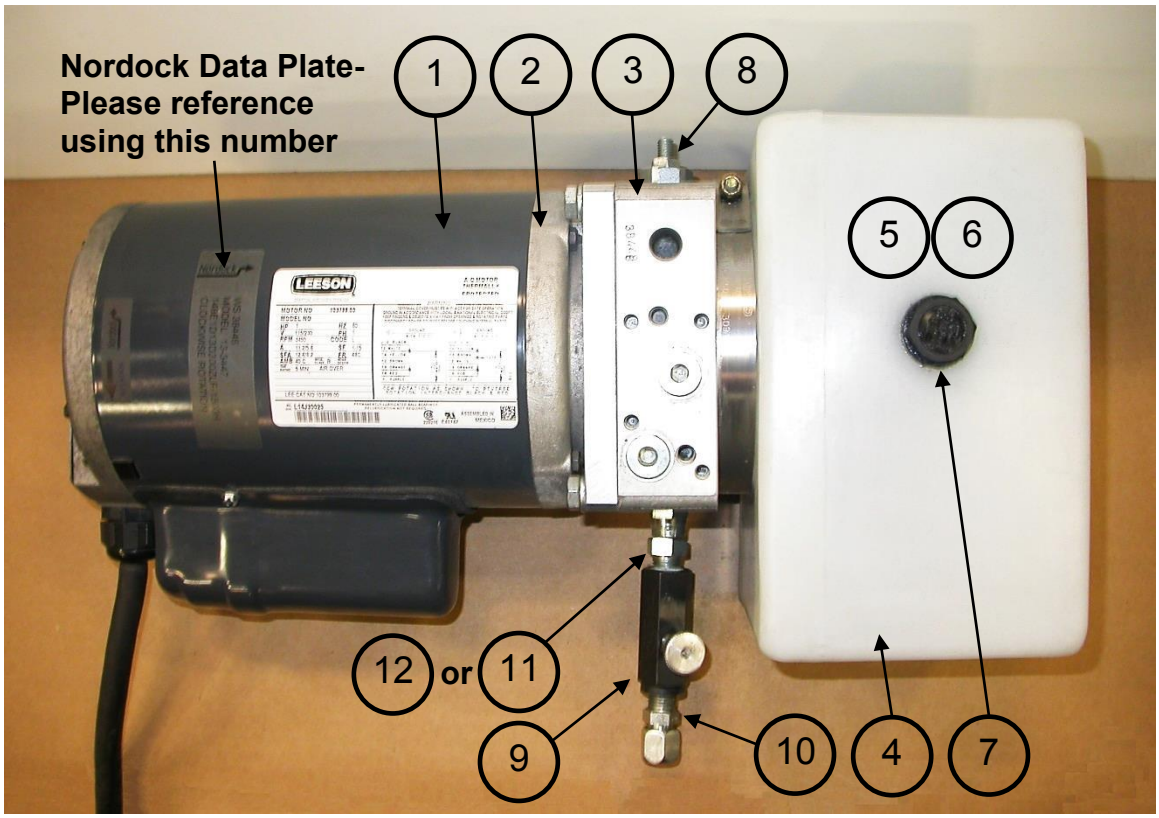

Item	Qty.	Description / Model		P/N	Note
		Complete Power Pack Assembly (Pts 1-12 below)	115 / 230 V 1 Ph 208 / 230 / 460 V 3 Ph 575 V 3 Ph	13-3447 13-3448 13-3449	
Power Pack Components:					
1	1	Drive Motor	115 / 230 v. 1 PH 230 / 460 v. 3 PH 575 v. 3 Ph		1
2	1	Motor Coupler	Standard Duty		
3	1	Manifold Assembly	Standard Duty		
4	1	Hydraulic Oil Reservoir			
5	1	Pump Assembly (Inside Tank)		13-3598	
6	1	Oil Pickup Screen and Tube (Inside Tank)			
7	1	Cap, Filler/ Vent			
8	1	Pressure Relief Valve Cartridge			
9	1	Flow Control Valve		13-1020	
10	1	Fitting, Hydraulic, Adapter, 9/16 (6) MJIC x 1/4 (4) MNPT		13-0100	
11	1	Fitting, Hydraulic, Adapter, 90°, 1/4 (4) MNPT x 3/8 (6) FJIC Swivel		13-0421	
12	1	Fitting, Hydraulic, Adapter, 1/4 (4) MNPT x 3/8 (6) FJIC Swivel		13-3518	

Note 1 – Consult factory when ordering individual power pack components.

Section 5 – Hydraulic Cylinders

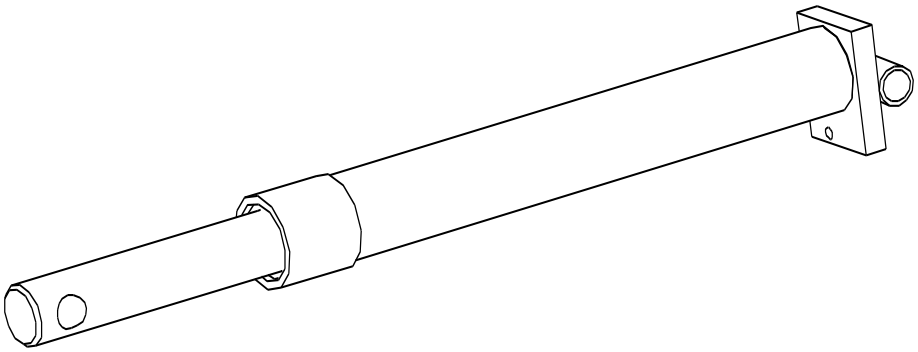

Ram Dia.	Length	Description / Model	P/N	Note
1 ½"	All 29" Closed	Seal Kit 22" Stroke, Deck Lift Cylinder	C3-0025 C1-0040	 1
	29" Closed	22" Stroke, Deck Lift Cylinder w/ Velocity Fuse	C1-0042	

Note 1 – Standard lift cylinder used on 20-50K ND dock levelers.

Section 6 – Hydraulic Lines and Fittings

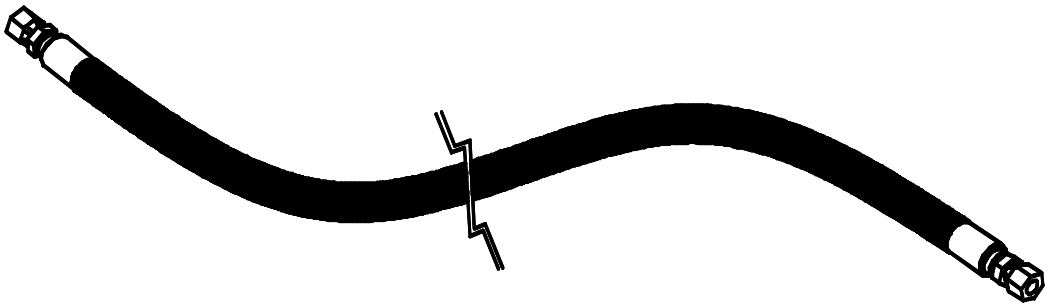

Dock length	Dia.	Description / Model	P/N	Note
6'	3/8"	Deck Lift Hose Assembly, x 72" long Hose kit, consisting of 1 hose	42-0559 13-1679	1
8'	3/8"	Deck Lift Hose Assembly, x 72" long Hose kit, consisting of 1 hose	42-0560 13-1679	1
10'	3/8"	Deck Lift Assembly, x 72" long Hose kit, consisting of 1 hose	42-0560 13-1679	1
Optional Emergency Stop:				
All	3/8"	Hose Assembly, Power Unit to Valve, x 18" long	13-3370	1
Optional Remote Mount Power Pack, standard length:				
All	3/8"	Hose Assembly, Deck Lift & Lip, x 20'-0" long (1 hose)	42-1545	1

Note 1: All hoses are #6 with 2 straight FJIC ends

Section 7 – Optional Equipment

Lip Extend/Emergency Stop Valve:

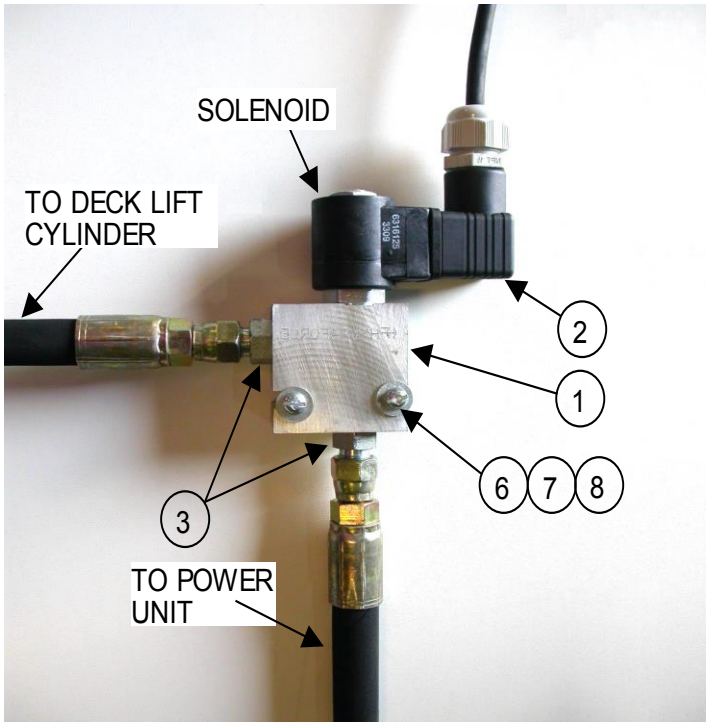

Item	Qty.	Description / Location		P/N	Note
1	1	Solenoid Valve / Rear Frame Brace	Complete Assembly Solenoid only	13-0826 13-0595	
2	1	Receptacle, solenoid valve, Hershman		13-2371	
3	2	Hydraulic Fitting, Str. #6 JICM / 9/16 M ORB		13-1309	
4	1	Pushbutton / Control Panel, Lip Extend (not shown)		13-0317	
5	1	Mushroom Pushbutton, / Control Panel, Emergency Stop Button (not shown)		13-0318	
6	2	Screw, #10-24 x 1 ½" long, plated, combo head		13-0274	
7	2	Washer, Lock, #10, plated		13-0948	
8	2	Washer, Flat, #10, plated		13-1956	

Note: See Section 5 for the hydraulic lines required for the Lip Extend/Emergency Stop valve.

Other Options:

Option	Qty.	Description / Location	P/N	Note
Auto Return	1 1 1	Limit Switch / Located on Frame Rail Timer / Control Panel On / Off Selector / Control Panel	13-0298 13-0156 13-0316	
Bumpers	2	Standard Bumper, AF410-11	61-0001	1
Weather Seals	6' 8' 10'	Brush Seal and Mounting Extrusion Kit Brush Seal and Mounting Extrusion Kit Brush Seal and Mounting Extrusion Kit, (3 pc)	61-0025 61-0024 61-0024	
Fall Safe	1	Velocity Fuse / Deck Lift Cylinder	13-0306	
Remote Mount Power Pack	1 4 4 4 4	Wall Mount Bracket Bolt, Hex, 1/4" – 20 UNC x 1" Nut, 1/4" – 20 UNC, Plated Washer, 1/4" SAE Flat Washer, 1/4" Lock	43-0428 13-0623 13-0334 13-0272 13-0335	

Note 1 – For custom bumper sizes and applications, please contact your nearest Nordock representative or call 1-866-885-4276.

Section 8 – Control Panels

Volts/Ph.	Description / Style	P/N	Note
115/1/60	Standard Panel / Single Pushbutton	13-3767	
	2 Button – Deck Raise, Emergency Stop		
	3 Button – Deck Raise, Emergency Stop, On/Off Switch	13-3440	
208/230/1/60	Standard Panel / Single Pushbutton	13-3768	
	2 Button – Deck Raise, Emergency Stop		
	3 Button – Deck Raise, Emergency Stop, On/Off Switch		
208/3/60	Standard Panel / Single Pushbutton	13-3769	
	2 Button – Deck Raise, Emergency Stop		
	3 Button – Deck Raise, Emergency Stop, On/Off Switch	13-3411	
230/3/60	Standard Panel / Single Pushbutton	13-3769	
	2 Button – Deck Raise, Emergency Stop		
	3 Button – Deck Raise, Emergency Stop, On/Off Switch	13-3412	
460/3/60	Standard Panel / Single Pushbutton	13-3770	
	2 Button – Deck Raise, Emergency Stop	13-3238	
	3 Button – Deck Raise, Emergency Stop, On/Off Switch	13-3413	
575/3/60	Standard Panel / Single Pushbutton	13-3771	
	2 Button – Deck Raise, Emergency Stop		
	3 Button – Deck Raise, Emergency Stop, On/Off Switch	13-3414	

NORDOCK®

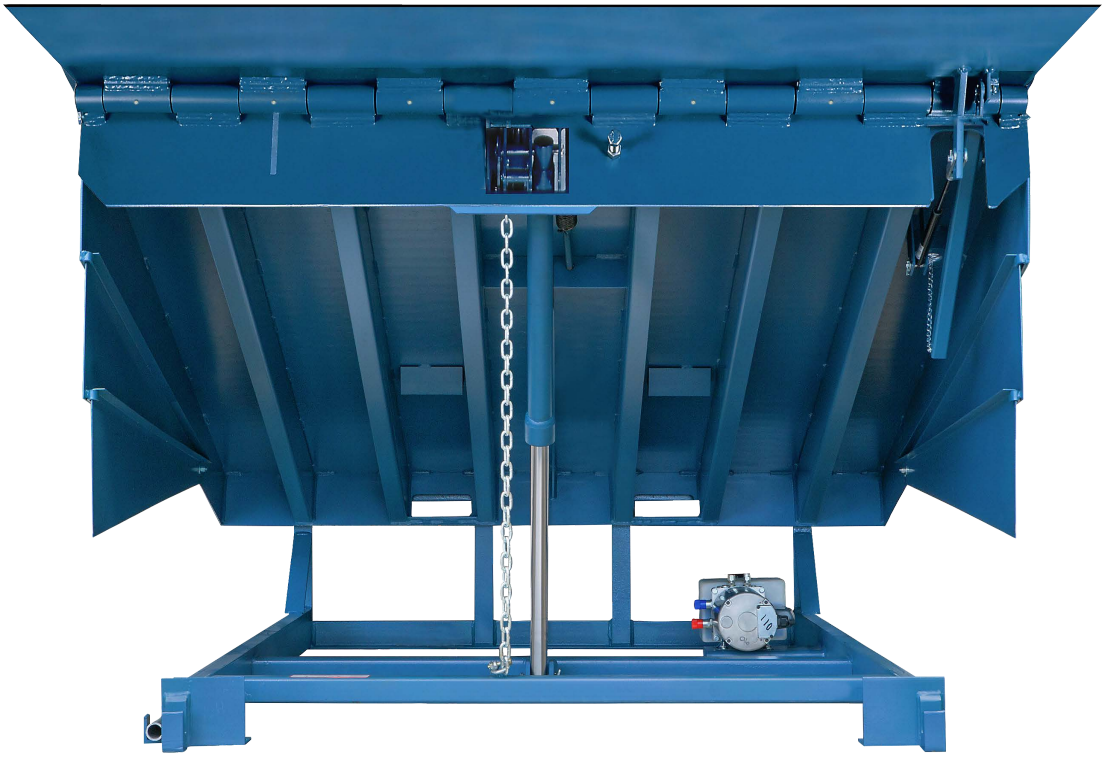

Hydraulic Dock Leveler
CONSTRUCTOR™ Series
Model (CH)

25,000 to 45,000 lbs. Capacity

Parts Manual

This Manual applies to dock levelers manufactured on or after 2014/12/31, with Serial Number(s) 30033 and greater.

P/N: 49-0116 - I

NORDOCK INC.
Website: nordockinc.com ~ Email: sales@nordockinc.com ~ Toll free: 866-885-4276
Nordock Inc. reserves the right to make changes to specifications without notice or obligation. Nordock products may be covered by various U.S. and foreign patents or pending applications.

Parts and Service Tables

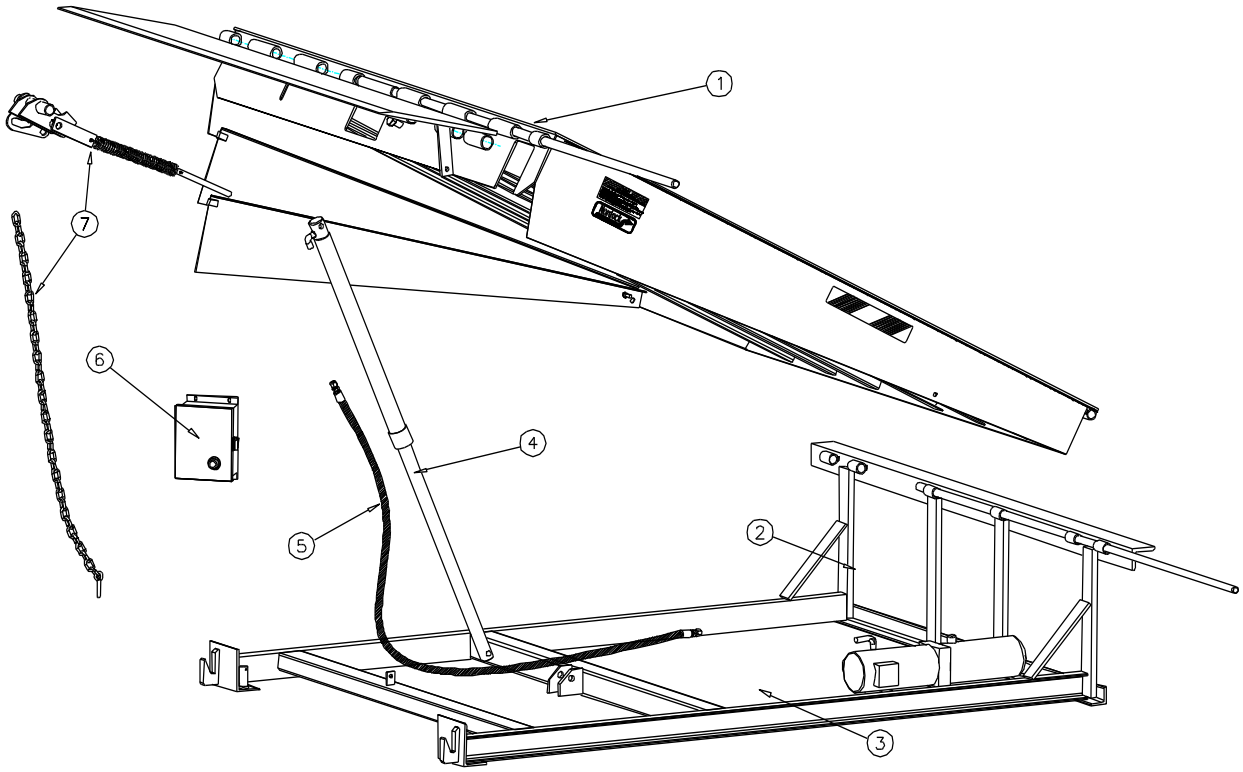

Item Number/ Section	Description
1	Deck and Lip Assembly
2	Frame Assembly
3	Power Pack and Related Hydraulic Components
4	Hydraulic Cylinders
5	Hydraulic Lines and Fittings
6	Lip Extension Mechanism
7	Control Panels

Note: Not all parts and weldments are noted in this manual. Only those that are serviceable and /or replaceable will be listed. For additional information on those parts not included in this manual, please contact Nordock. Remember to make note of the model and serial number of the unit for accurate parts and service.

Section 1 – Deck and Lip Assembly

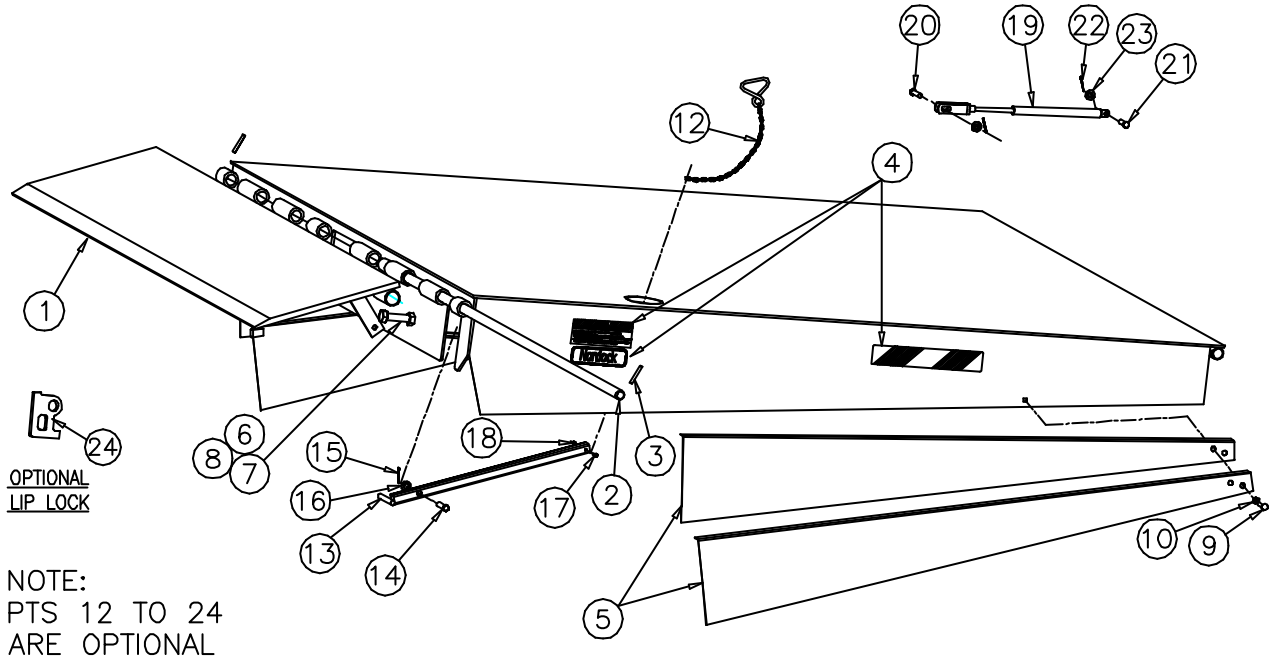

Item	Qty.	Description / Model							Note
1	1	Lip Weldment							
		Capacity	Length	P/N					
				6’	6.5’	7’	7’T	70”	
		25-30K	16”	42-1120	42-1129	42-1138	42-1147	42-1156	
			18”	42-1121	42-1130	42-1139	42-1148	42-1157	
			20”	42-1122	42-1131	42-1140	42-1149	42-1158	
		35K	16”	42-1123	42-1132	42-1141	42-1150	42-1159	
			18”	42-1124	42-1133	42-1142	42-1151	42-1160	
			20”	42-1125	42-1134	42-1143	42-1152	42-1161	
		40-45K	16”	42-1126	42-1135	42-1144	42-1153	42-1162	
			18”	42-1127	42-1136	42-1145	42-1154	42-1163	
			20”	42-1128	42-1137	42-1146	42-1155	42-1164	
2	1	Lip Hinge Rod		43-0148	43-0149	43-0150	43-0150	43-0465	

Item	Qty.	Description / Model		P/N	Note
3	2	Roll Pin, ¼" x 2" long		13-0555	
4	1	Dock leveler Decal Kit		42-0392	
5	1 1	Telescoping Side Skirt Kit	6' Long Docks 8' Long Docks	42-0393 42-0394	
6	1	5/8" Dia. Nut, Bolt x 4" Long		13-0302	
7	1	Washer, Lock, plated		13-0657	
8	1	Nut, Hex, 5/8"-11NC, 5/8", plated		13-0289	
9	2	Bolt, 3/8" - 16 UNC x 1 1/4" Carriage Head		13-0122	
10	2	Nut, 3/8" - 16 Grade 5, Nylock		13-0707	
Optional Equipment:					
12	1	Below Dock Chain – Deck to Handle (9 ½")		42-1415	
13	1	Below Dock Control Lever – Handle to Lip		43-2016	
14	1	Clevis Pin – Lip Extend ½ x 2 ¼"		13-0288	
15	1	Cotter Pin, 1/8" x 1" long, plated		13-0171	
16	1	Washer, ½" plated		13-0267	
17	1	Screw, 10-24 x 1" long, plated		13-0841	
18	1	Nut, Nylock 10-24		13-1858	
Gas Spring Components (when equipped):					
19	1	Gas Spring – Lip Extend (Quantity As Required) Gas Spring c/w Clevis End Gas Spring only		 42-1568 13-2783	
20	1	Clevis Pin – Gas Spring to Lip, 1/2" x 1 1/4"		13-2111	
21	1	Clevis Pin – Gas Spring to Deck, 3/8" x 1 5/8"		13-0500	
22	2	Cotter Pin, 3/16" x 1		13-0171	
23	1	Washer, 3/8" SAE Flat		13-0203	
Optional Lip Maintenance Lock					
24	1	Lip Lock	All Docks	43-1062	

Note 1 – For correct decal placement, see safety section.

Section 2 – Frame

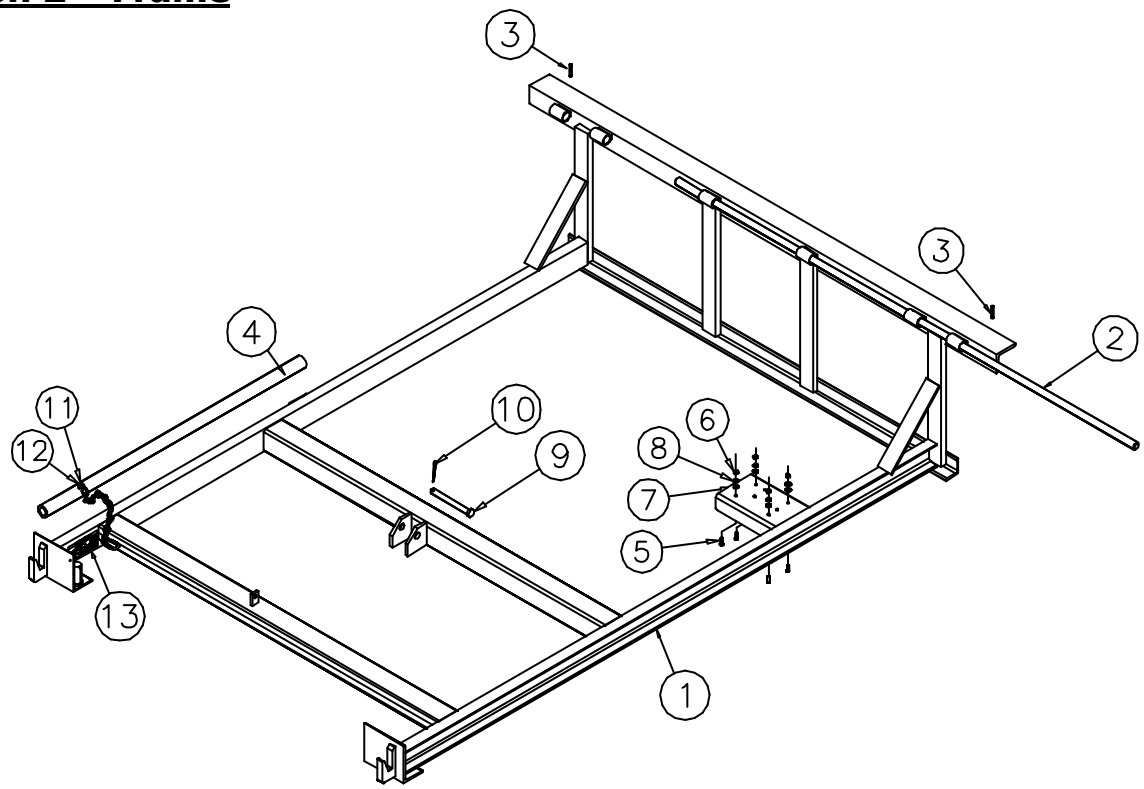

Item	Qty.	Description / Model					P/N	Note
1	1	Frame Weldment	Dock Length	P/N- Dock Width				1
				6’	6.5’	7’	70”	
			6’	42-1459		42-1471		
			8’	42-1465		42-1472		
2	1	Rear Hinge Rod		43-0154	43-0155	43-0156	43-0462	
3	2	1/4" x 2" Roll Pin					13-0555	
4	1	Maintenance / Support Stand					43-0262	
5	4	Bolt, 1/4" - 20 UNC x 1, Plated					13-0623	
6	4	Nut, 1/4" - 20 UNC, Nylock, Plated					13-0334	
7	4	Washer, 1/4" SAE Flat					13-0272	
8	4	Washer, Lock, ¼”, Plated					13-0335	
9	1	Lower Cylinder Pin, ¾” dia.					43-0994	
10	1	Cotter Pin, 3/16" x 1 3/4"					13-0304	
11	1	Screw, Tek #14 x 1 ¼” long					13-2359	
12	1	Washer, ¼” Fender					13-0271	
13	1	Decal, Dock leveler, Lock-Out Tag-Out					43-1287	

Note 1 – The standard Rear Frame angle width is 3”. Angle widths may vary to suit pit length. Please consult factory when ordering replacement frames.

Note 2 – CH docks use a spacer kit for a 23” frame depth.

Section 3 – Power Pack and Related Hydraulic Components

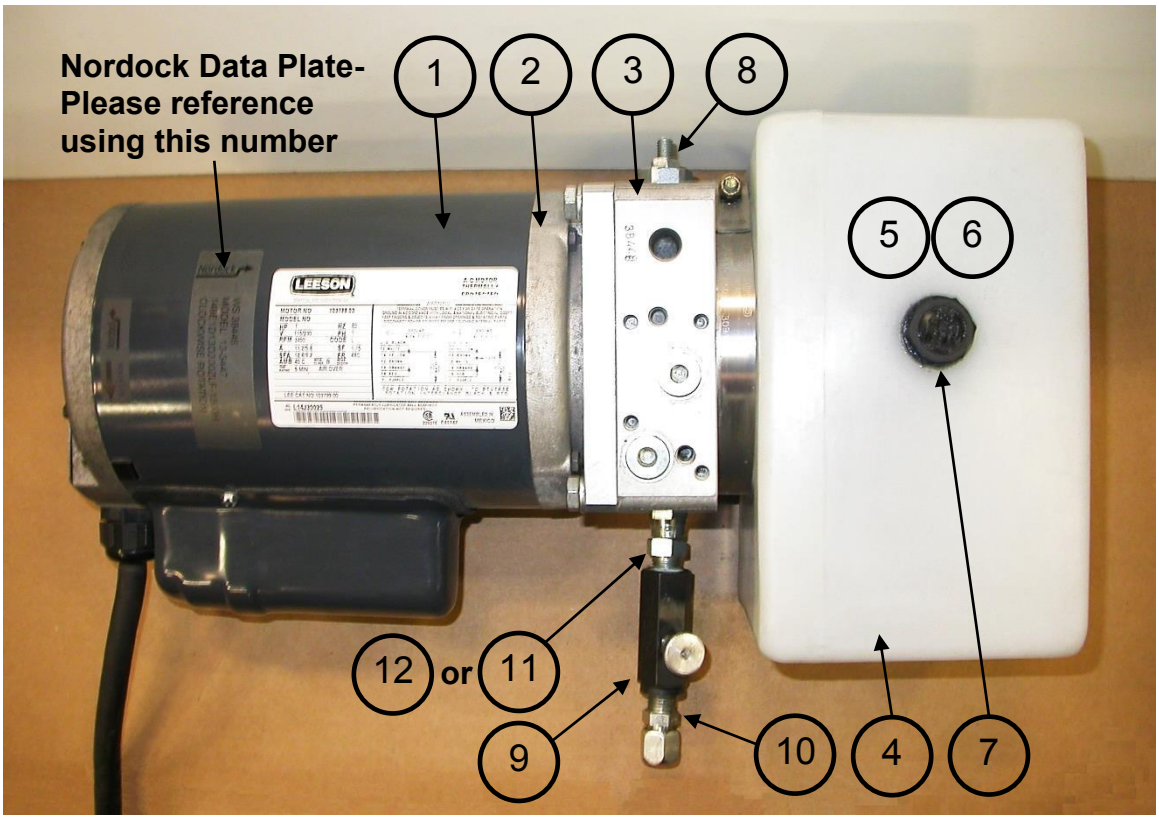

Item	Qty.	Description / Model		P/N	Note
		Complete Power Pack Assembly (Pts 1-12 below)	115 / 230 V 1 Ph 208 / 230 / 460 V 3 Ph 575 V 3 Ph	13-3447 13-3448 13-3449	
Power Pack Components:					
1	1	Drive Motor	115 / 230 v. 1 PH 230 / 460 v. 3 PH 575 v. 3 Ph		1
2	1	Motor Coupler	Standard Duty		
3	1	Manifold Assembly	Standard Duty		
4	1	Hydraulic Oil Reservoir			
5	1	Pump Assembly (Inside Tank)		13-3598	
6	1	Oil Pickup Screen and Tube (Inside Tank)			
7	1	Cap, Filler/ Vent			
8	1	Pressure Relief Valve Cartridge			
9	1	Flow Control Valve		13-1020	
10	1	Fitting, Hydraulic, Adapter, 9/16 (6) MJIC x 1/4 (4) MNPT		13-0100	
11	1	Fitting, Hydraulic, Adapter, 90°, 1/4 (4) MNPT x 3/8 (6) FJIC Swivel		13-0421	
12	1	Fitting, Hydraulic, Adapter, 1/4 (4) MNPT x 3/8 (6) FJIC Swivel			

Note 1 – Consult factory when ordering individual power pack components.

Section 4 – Hydraulic Cylinders

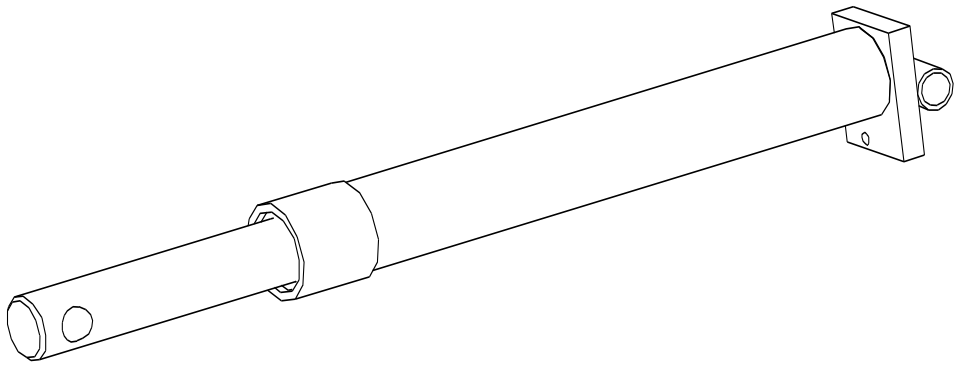

Ram Dia.	Length	Description / Model	P/N	Note
1 ½”	All 29” Closed	Seal Kit 22” Stroke, Deck Lift Cylinder	C3-0025 C1-0040	 1
	29” Closed	22” Stroke, Deck Lift Cylinder w/ Velocity Fuse	C1-0042	

Note 1 – Standard lift cylinder used on 25-45K CH dock levelers.

Section 5 – Hydraulic Lines and Fittings

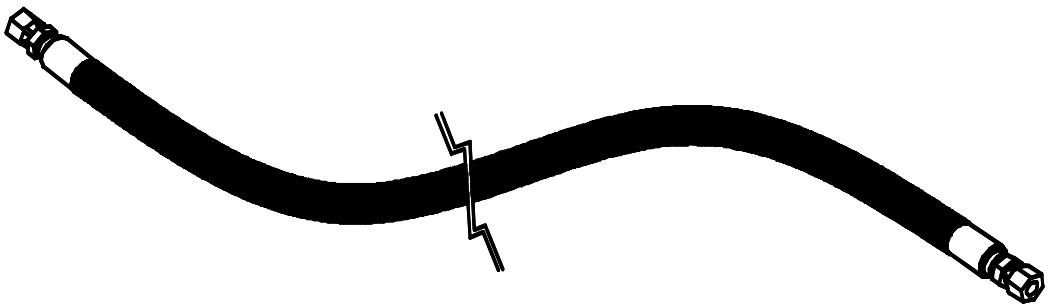

Dock length	Dia.	Description / Model	P/N	Note
6’	3/8”	Deck Lift Hose Assembly, x 72” long Hose kit, consisting of 1 hose	42-0559 13-1679	
8’	3/8”	Deck Lift Hose Assembly, x 72” long Hose kit, consisting of 1 hose	42-0560 13-1679	
Optional Emergency Stop:				
All	3/8”	Hose Assembly, Power Unit to Valve, x 18” long	13-3370	
Optional Remote Mount Power Pack, standard length:				
All	3/8”	Hose Assembly, Deck Lift & Lip, x 20’-0” long (1 hose)	42-1545	

Note 1: All hoses are #6 with 2 straight FJIC ends

Section 6 – Optional Equipment

Lip Extend/Emergency Stop Valve:

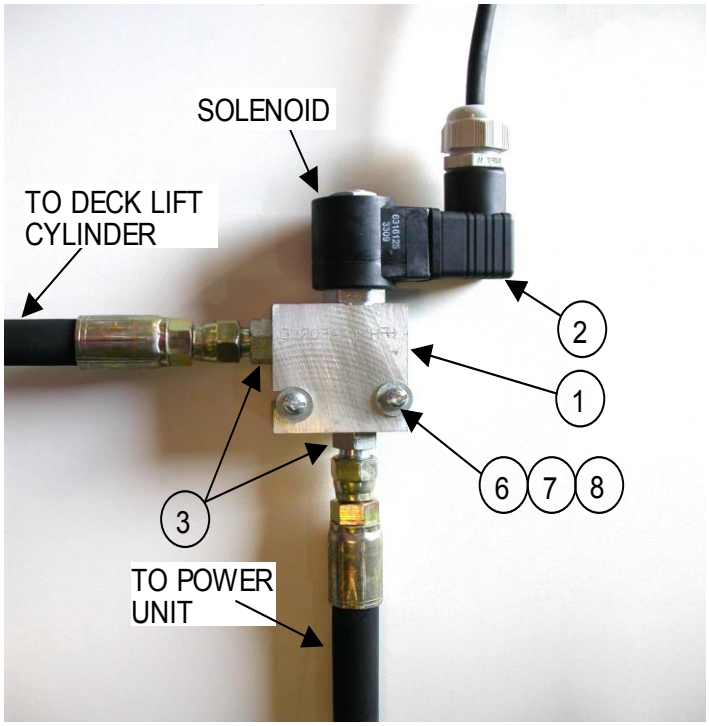

Item	Qty.	Description / Location		P/N	Note
1	1	Solenoid Valve / Rear Frame Brace	Complete Assembly Solenoid only	13-0826 13-0595	
2	1	Receptacle, solenoid valve, Hershman		13-2371	
3	2	Hydraulic Fitting, Str. #6 JICM / 9/16 M ORB		13-1309	
4	1	Pushbutton / Control Panel, Lip Extend (not shown)		13-0317	
5	1	Mushroom Pushbutton, / Control Panel, Emergency Stop Button (not shown)		13-0318	
6	2	Screw, #10-24 x 1 ½" long, plated, combo head		13-0274	
7	2	Washer, Lock, #10, plated		13-0948	
8	2	Washer, Flat, #10, plated		13-1956	

Note: See Section 5 for the hydraulic lines required for the Lip Extend/Emergency Stop valve.

Other Options:

Option	Qty	Description / Location	P/N	Note
Auto Return	1 1 1	Limit Switch / Located on Frame Rail Timer / Control Panel On / Off Selector / Control Panel	13-0298 13-0156 13-0316	
Bumpers	2	Standard Bumper, AF410-11	61-0001	1
Weather Seals	6' 8' 10'	Brush Seal and Mounting Extrusion Kit Brush Seal and Mounting Extrusion Kit Brush Seal and Mounting Extrusion Kit, (3 pc)	61-0025 61-0024 61-0024	
Fall Safe	1	Velocity Fuse / Deck Lift Cylinder	13-0306	
Remote Mount Power Pack	1 4 4 4 4	Wall Mount Bracket Bolt, Hex, 1/4" – 20 UNC x 1" Nut, 1/4" – 20 UNC, Plated Washer, 1/4" SAE Flat Washer, 1/4" Lock	43-0428 13-0623 13-0334 13-0272 13-0335	

Note 1 – For custom bumper sizes and applications, please contact your nearest Nordock representative or call 1-866-885-4276.

Section 7 – Lip Actuator Assembly

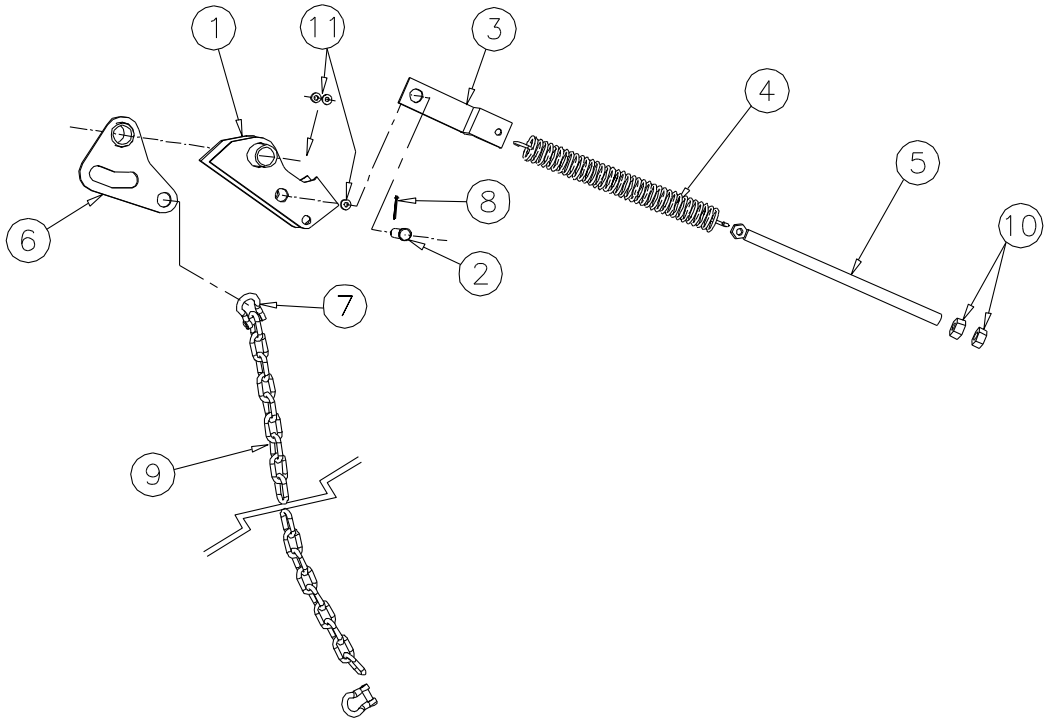

Item	Qty.	Description / Style		P/N	Note
1	1	Lip Cam Weldment		42-1166	
2	1	Pin, Lip Cam, ¾" x 5"		42-1386	
3	1	Return Spring Mount		42-1333	
4	1	Cam Return Spring		13-0565	
5	1	Adjuster Rod		42-1443	
6	1	Lip Extend Actuator		42-1165	
7	2	Shackle, 5/16" Dia. Forged Steel with 5/16" Bolt		13-2161	
8	2	Cotter Pin, 3/16" x 1 ¾" long, plated		13-0304	
9	1	Actuator Chain	6' Long Dock 8' Long Dock	43-0415 43-0415	
10	2	Nut, 5/8-11unc, plated		13-0289	
11	3	Washer, ¾" plated		13-0649	

Section 8 – Control Panels

Volts/Ph.	Description / Style	P/N	Note
115/1/60	Standard Panel / Single Pushbutton	13-3767	
	2 Button – Deck Raise, Emergency Stop		
	3 Button – Deck Raise, Emergency Stop, On/Off Switch	13-3440	
208/230/1/60	Standard Panel / Single Pushbutton	13-3768	
	2 Button – Deck Raise, Emergency Stop		
	3 Button – Deck Raise, Emergency Stop, On/Off Switch		
208/3/60	Standard Panel / Single Pushbutton	13-3769	
	2 Button – Deck Raise, Emergency Stop		
	3 Button – Deck Raise, Emergency Stop, On/Off Switch	13-3411	
230/3/60	Standard Panel / Single Pushbutton	13-3769	
	2 Button – Deck Raise, Emergency Stop		
	3 Button – Deck Raise, Emergency Stop, On/Off Switch	13-3412	
460/3/60	Standard Panel / Single Pushbutton	13-3770	
	2 Button – Deck Raise, Emergency Stop	13-3238	
	3 Button – Deck Raise, Emergency Stop, On/Off Switch	13-3413	
575/3/60	Standard Panel / Single Pushbutton	13-3771	
	2 Button – Deck Raise, Emergency Stop		
	3 Button – Deck Raise, Emergency Stop, On/Off Switch	13-3414	

NORDOCK®



Hydraulic Dock Leveler
FALL-SAFE™ Series
Sliding Barrier Lip Model (SBL)

30,000 to 50,000 lbs. Capacity

Parts Manual

This manual applies to dock levelers manufactured on or after
February 2017, with Serial Numbers 37900 and greater.

P/N: 49-0247-B

NORDOCK INC.
Website: nordockinc.com ~ Email: sales@nordockinc.com ~ Toll free: 866-885-4276
Nordock Incorporated reserves the right to make changes to specifications without notice or obligation.
Nordock products may be covered by various U.S. and foreign patents or pending applications.

Parts and Service Tables

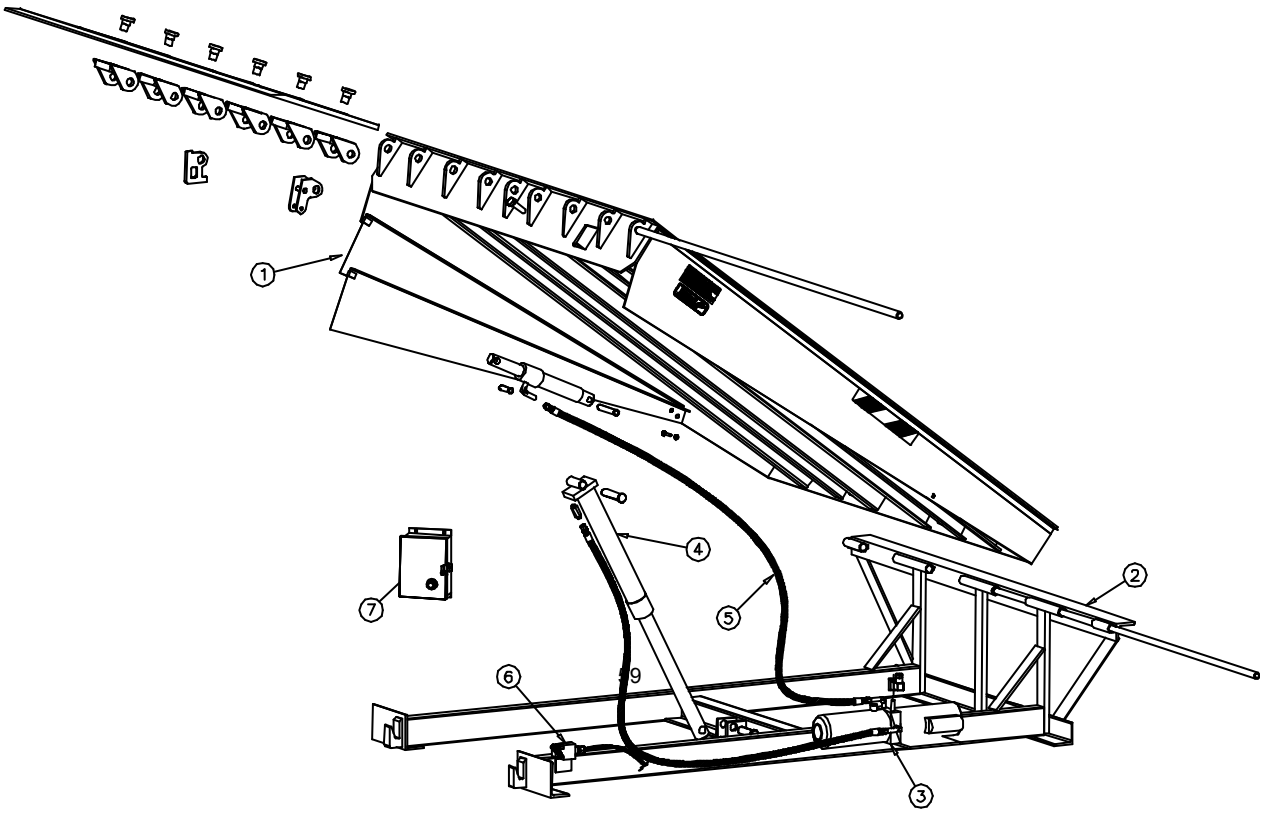

Item Number/ Section	Description
1	Deck and Lip Assembly
2	Frame Assembly
3	Power Pack and Related Hydraulic Components
4	Hydraulic Cylinders
5	Hydraulic Lines and Fittings
6	Optional Equipment
7	Control Panel

Note: Not all parts and weldments are noted in this manual. Only those that are serviceable and /or replaceable will be listed. For additional information on those parts not included in this manual, please contact Nordock Inc. Remember to make note of the model and serial number of the unit for accurate parts and service.

Section 1 – Deck and Lip Assembly

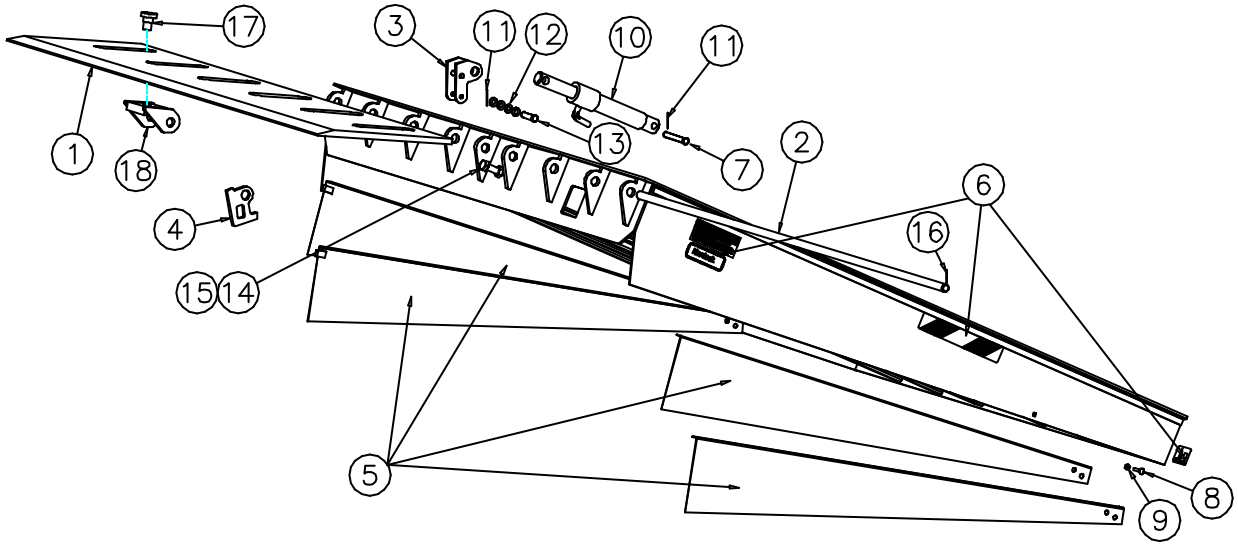

Item	Qty.	Description / Model					Note
1	1	Lip Plate, 30-50K, 20” long	P/N, Deck Width				
			6’	6.5’	7’	7’T	70”
			43-1508	43-1509	43-1510	43-1513	43-1514
2	1	Hinge Rod, 1”	43-1511	43-1511	43-1512	43-1512	43-1511
							P/N
3	1	Lip Cam Weldment			30-50K		42-2964
4	1	Lip Safety Lock Lug					43-0452
5	1	Telescoping Side Skirt Kit – 6’ Telescoping Side Skirt Kit – 8’ Telescoping Side Skirt Kit – 10’					42-0393 42-0394 42-0395
6	1	Dock Leveler Decal Kit					42-0392 **1**
7	1	Clevis Pin, 1/2" x 4 1/2" Optional St St Pin					13-3672 43-1026
8	2	Bolt, 3/8” - 16 UNC x 1 1/4" Carriage Head					13-0122
9	2	Nut, 3/8" - 16 Grade 5, Nylock					13-0707
10	1	Lip Cylinder - 1 1/2” Seal Kit - 1 1/2”					C1-0009 C3-0025
11	2	Cotter Pin, 1/8” x 1”					13-0171
12	4	Washer, 1/2" Flat					13-0267
13	1	Clevis Pin, 1/2" x 3 1/2" Optional St St Pin, ½” x 4”					13-0399 13-1025
14	1	5/8” Dia. Nut, Bolt x 4” Long					13-0302
15	1	Nut, Hex, 5/8”-11NC, plated					13-0289
16	2	Roll pin, ¼” x 2”					13-0555
17	6 8	Bolt, Lip - 6’ & 6.5’ Wide Docks Bolt, Lip - 7’ Wide Dock					43-1500 **2**
18	6 8	Lip Lug Weldment, 30-50K -6’ & 6.5’ Wide Docks Lip Lug Weldment, 30-50K - 7’ Wide Dock					42-2963

NOTE 1: – For correct decal placement, see safety section.
NOTE 2: – See Maintenance and Lubrication Section for lip bolt recommended tightening torque.

Section 2 – Frame

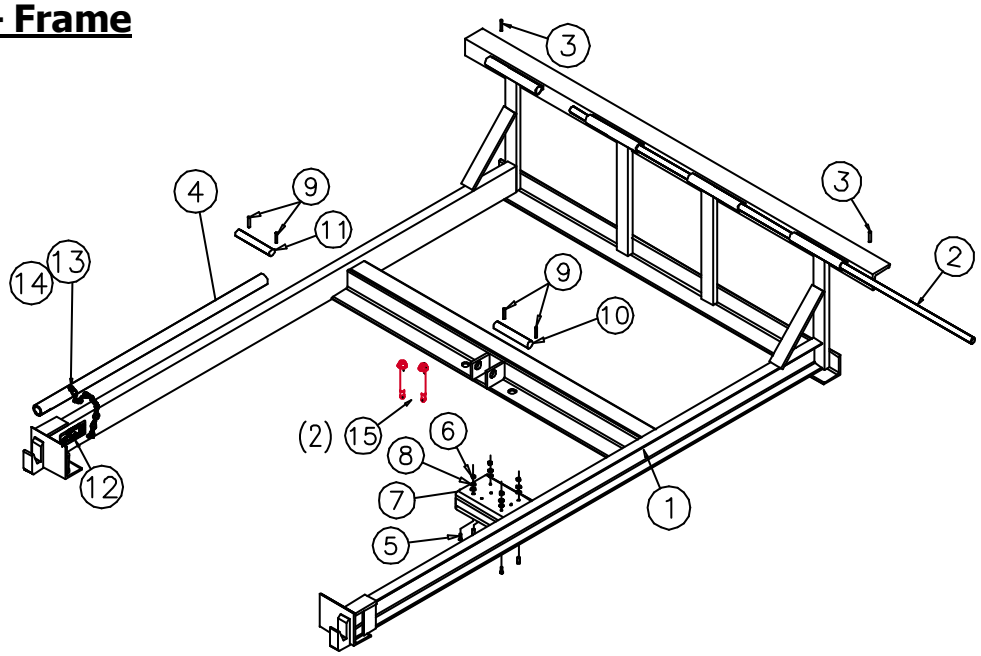

Item	Qty.	Description / Model		P/N 19″ Frame	P/N 23″ Frame	Note
1	1	Frame Weldment, 30-50K	6 X 6 6 X 8 6 X 10	42-2950 42-2951 42-2952	42-2999	1
			6.5X 6 6.5 X 8 6.5 X 10	42-2953 42-2954 42-2955		
			7 X 6 7 X 8 7 X 10	42-2956 42-2957 42-2958	42-2998	
2	1	Hinge Rod, 7/8”	Dock Width	6’ 6.5’ 7’ 70”	43-0154 43-0155 43-0156 43-0462	
3	2	Roll Pin, 1/4" x 2"			13-0555	
4	1	Maintenance / Support Stand	19” & 23” Frames (40”)		43-0262	
5	4	Bolt, Hex, 1/4" – 20 UNC x 1”			13-0623	
6	4	Nut, 1/4" – 20 UNC, Plated			13-0334	
7	4	Washer, 1/4" SAE Flat			13-0272	
8	4	Washer, 1/4” Lock			13-0335	
9	4	Cotter Pin, 1/4” x 1 3/4"			13-0992	
10	1	Lower Cylinder Mount Pin, 4 ½” long Optional St St Pin			43-0312 43-1028	
11	1	Upper Cylinder Mount Pin, 6 ¾” long Optional St St Pin			43-0310 43-1027	
12	1	Decal, Dock leveler, Lock-Out Tag-Out			43-1287	
13	1	Screw, ¼” -14 x 1, Tek, Hex Head, plated			13-0273	
14	1	Washer, ¼” Fender, Plated			13-0271	
15	2	Anchor, Wedge, ¾” x 5 ½” long, plated			13-4569	

Note 1 – The standard Rear Frame angle width is 3”. Widths may vary to suit pit length. Please consult factory when ordering replacement frames.

Section 3 – Power Pack and Related Hydraulic Components

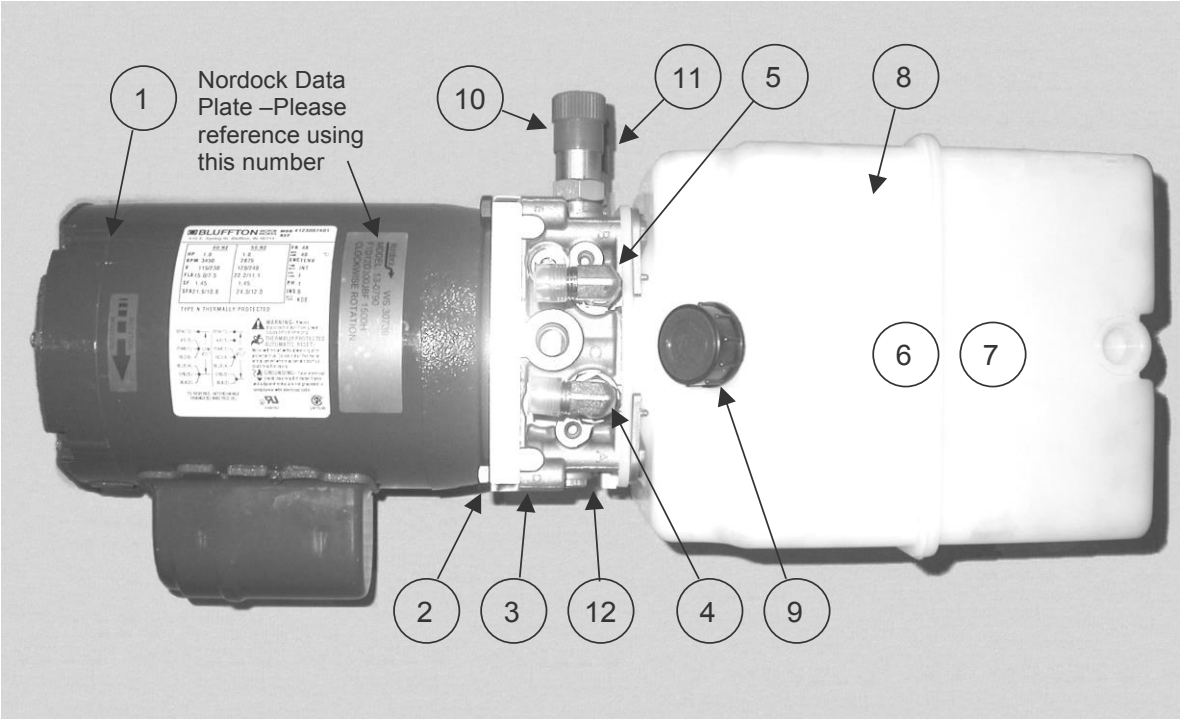

Item	Qty.	Description / Model		P/N	Note
		Complete Power Pack Assembly (Pts 1-12 below)	115 / 230 V 1 Ph. 230 / 460 V 3 Ph. 575 V 3 Ph.	13-0790 13-0791 13-0792	
Power Pack Components:					
1	1	Drive Motor	115 / 230 v. 1 PH 230 / 460 v. 3 PH 575 v. 3 Ph.		1
2	1	Motor Coupler	Standard Duty		
3	1	Manifold Assembly	Standard Duty		
4	1	Hydraulic Fitting, 90° 3/8” FNPT x #6MJIC, Deck Lift Port			
5	1	Hydraulic Fitting, 90° 3/8” FNPT x #6MJIC, Lip Ext. Port			
6	1	Pump Assembly (Inside Tank)			
7	1	Oil Pickup Screen and Tube (Inside Tank)			
8	1	Hydraulic Oil Reservoir Kit		13-2824	
9	1	Filler / Vent Cap		13-3596	
10	1	Sequence Valve Cartridge		13-2419	
11	1	Pressure Relief Valve Cartridge		13-3332	
12	1	Flow Control Valve, Adjusting Needle w O-Ring & Nut		13-3341	

Note 1 – Consult factory when ordering individual power pack components.

Section 4 – Hydraulic Cylinders

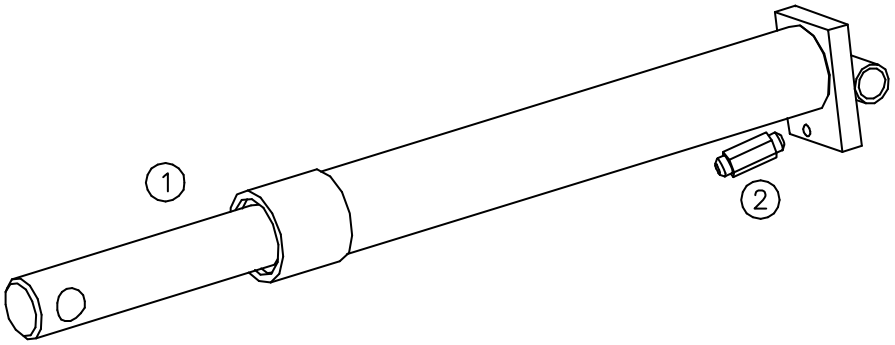

Item	Qty.	Description	Dock Length	Cylinder Length	Stroke	P/N	Note
1	1	Deck Lift Cylinder, 2" Diameter, 20-50K	6' 8' 10'	25" Closed 25" Closed 28" Closed	17" 17" 20"	C1-0011 C1-0011 C1-0030	
	1	Seal Kit, 2"	All			C3-0020	
2	A/R	Velocity Fuse (1 required per cylinder)	20-50K Docks, 3 gpm			13-0306	

Section 5 – Hydraulic Lines and Fittings

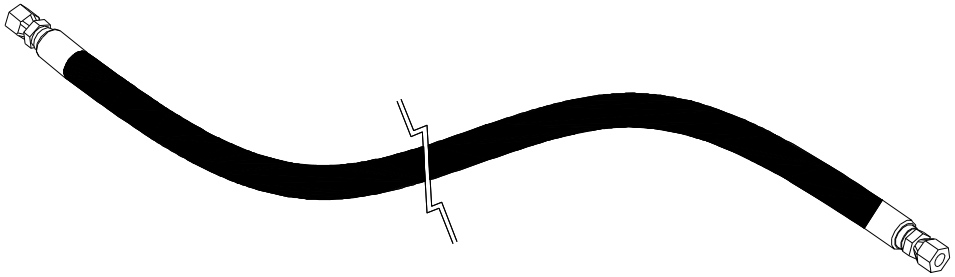

Dock length	Dia.	Description / Model	P/N	Note
6'	3/8"	Deck Lift Hose Assembly, x 72" long Lip Hose Assembly, ……. x 48" long Hose kit, consisting of 1 each above hoses	42-0383 42-0386 13-1678	 1
8'	3/8"	Deck Lift Hose Assembly, x 75" long Lip Hose Assembly, ……. x 54" long Hose kit, consisting of 1 each above hoses	42-0384 42-0387 13-1677	 1
10'	3/8"	Deck Lift Hose Assembly, x 87" long Lip Hose Assembly, ……. x 78" long	42-0385 42-0388	1
Emergency Stop:				
All	3/8"	Hose Assembly, Power Unit to Valve, x 18" long	13-3370	
All	3/8"	Hose Assembly, Deck Lift, x 72" long	42-0383	
Optional Remote Mount Power Pack, standard length:				
All	3/8"	Hose Assembly, Deck Lift & Lip, x 20'-0" long (2 hoses required per dock)	42-1545	

Note 1: All hoses are #6 with 2 straight FJIC ends

Lip Extend/Emergency Stop Valve:

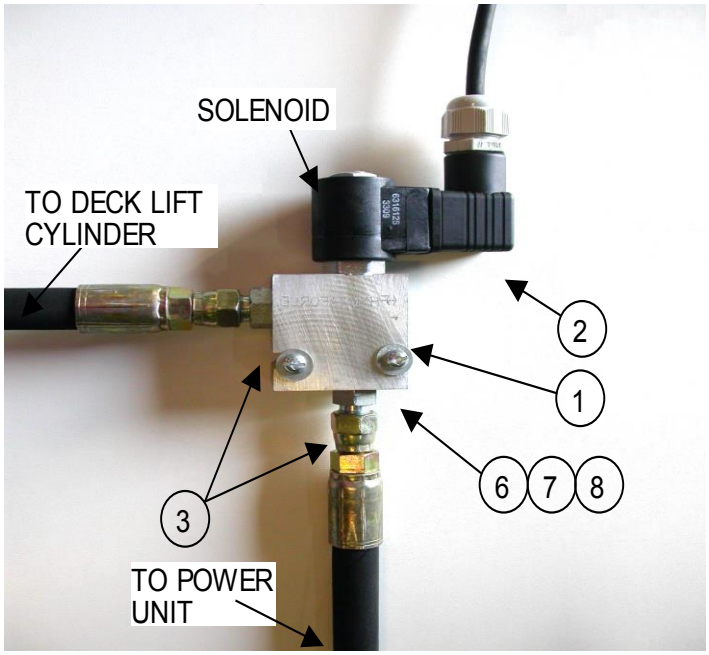

Item	Qty.	Description / Location		P/N	Note
1	1	Solenoid Valve / Rear Frame Brace	Complete Assembly Solenoid only	13-0826 13-0595	
2	1	Receptacle, solenoid valve, Hershman		13-2371	
3	2	Hydraulic Fitting, Str. #6 JICM / 9/16 M ORB		13-0609	
4	1	Pushbutton / Control Panel, Lip Extend (not shown)		13-0317	
5	1	Mushroom Pushbutton, / Control Panel, Emergency Stop Button (not shown)		13-0318	
6	2	Screw, #10-24 x 1 ½" long, plated, combo head		13-0274	
7	2	Washer, Lock, #10, plated		13-0948	
8	2	Washer, Flat, #10, plated		13-1956	

Note: See Section 5 for the hydraulic lines required for the Lip Extend/Emergency Stop valve.

Section 6 – Optional Equipment

Option	Qty.	Description / Location	P/N	Note
Auto Return	1 1 1	Limit Switch / Located on Frame Rail Timer / Control Panel On / Off Selector / Control Panel	13-0298 13-0156 13-0316	
Dock Store	1	Limit Switch / Located on Frame Rail	13-0298	
Bumpers	2	Standard Bumper, AF410-11	61-0001	1
Weather Seals	6' 8' 10'	Brush Seal and Mounting Extrusion Kit Brush Seal and Mounting Extrusion Kit Brush Seal and Mounting Extrusion Kit, (3 pc)	61-0025 61-0024 61-0024	
Remote Mount Power Pack	1 4 4 4 4	Wall Mount Bracket Bolt, Hex, 1/4" – 20 UNC x 1" Nut, 1/4" – 20 UNC, Plated Washer, 1/4" SAE Flat Washer, 1/4" Lock	43-0428 13-0623 13-0334 13-0272 13-0335	

Note 1 – For custom bumper sizes and applications, please contact your nearest Nordock representative or call 1-866-885-4276.

Section 7 – Control Panels

Volts/Ph.	Description / Style	P/N	Note
115/1/60	Standard, 3 Button – Deck Raise, Lip Extend, and Emergency Stop	13-1132	
	Optional:		
	4 Button – Deck Raise, Lip Extend and Emergency Stop, Auto Return	13-1350	
208/1/60	Standard, 3 Button – Deck Raise, Lip Extend, and Emergency Stop	13-2625	
	Optional:		
	4 Button – Deck Raise, Lip Extend and Emergency Stop, Auto Return	13-3017	
230/1/60	Standard, 3 Button – Deck Raise, Lip Extend, and Emergency Stop	13-2626	
	Optional:		
	4 Button – Deck Raise, Lip Extend and Emergency Stop, Auto Return	13-1982	
208/3/60	Standard, 3 Button – Deck Raise, Lip Extend, and Emergency Stop	13-2402	
	Optional:		
	4 Button – Deck Raise, Lip Extend and Emergency Stop, Auto Return	13-1243	
230/3/60	Standard, 3 Button – Deck Raise, Lip Extend, and Emergency Stop	13-2382	
	Optional:		
	4 Button – Deck Raise, Lip Extend and Emergency Stop, Auto Return	13-3574	
460/3/60	Standard, 3 Button – Deck Raise, Lip Extend, and Emergency Stop	13-2500	
	Optional:		
	4 Button – Deck Raise, Lip Extend and Emergency Stop, Auto Return	13-2426	
575/3/60	Standard, 3 Button – Deck Raise, Lip Extend, and Emergency Stop	43-0261	
	Optional:		
	4 Button – Deck Raise, Lip Extend and Emergency Stop, Auto Return	13-3784	

NOTE: All panels higher than 115V have a reduced voltage secondary to 115V.

NORDOCK®

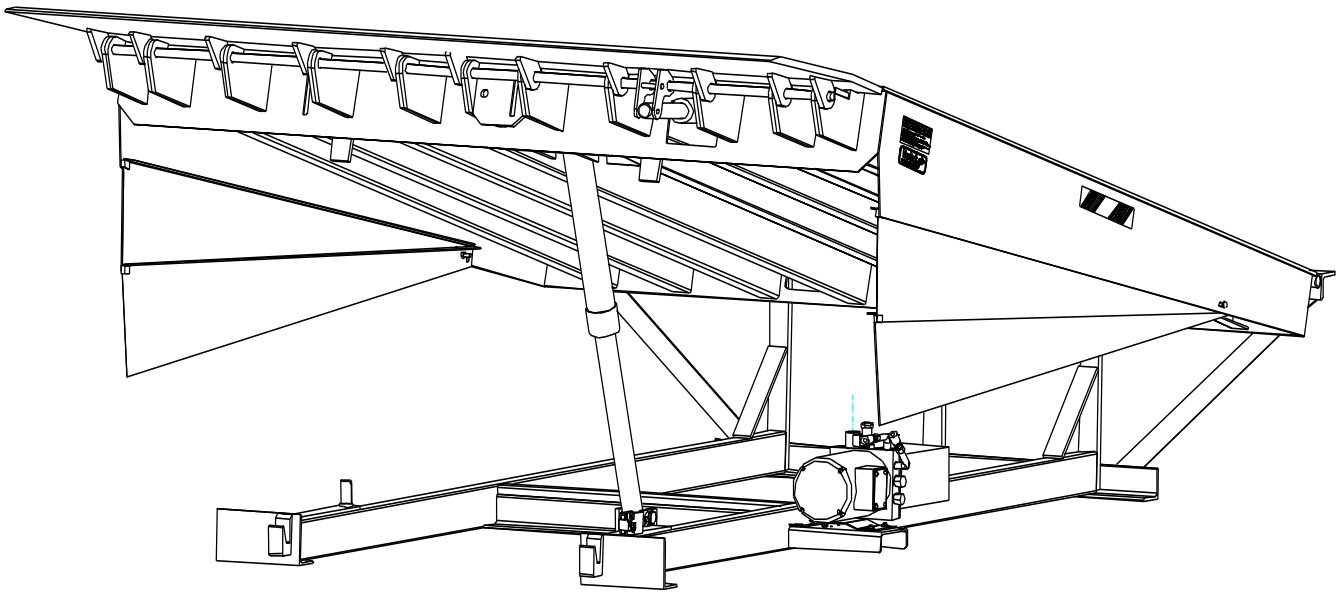

Hydraulic Dock Leveler
BARRIER™ Series
Model (NB)

60,000 to 80,000 lbs. Capacity

Parts Manual

This manual applies to dock levelers manufactured on or after
February 2017, with Serial Numbers 37900 and greater.

P/N: 49-0179-B

NORDOCK INC.
Website: nordockinc.com ~ Email: sales@nordockinc.com ~ Toll free: 866-885-4276
Nordock Inc. reserves the right to make changes to specifications without notice or obligation. Nordock products may be covered by various U.S. and foreign patents or pending applications.

Parts and Service Tables

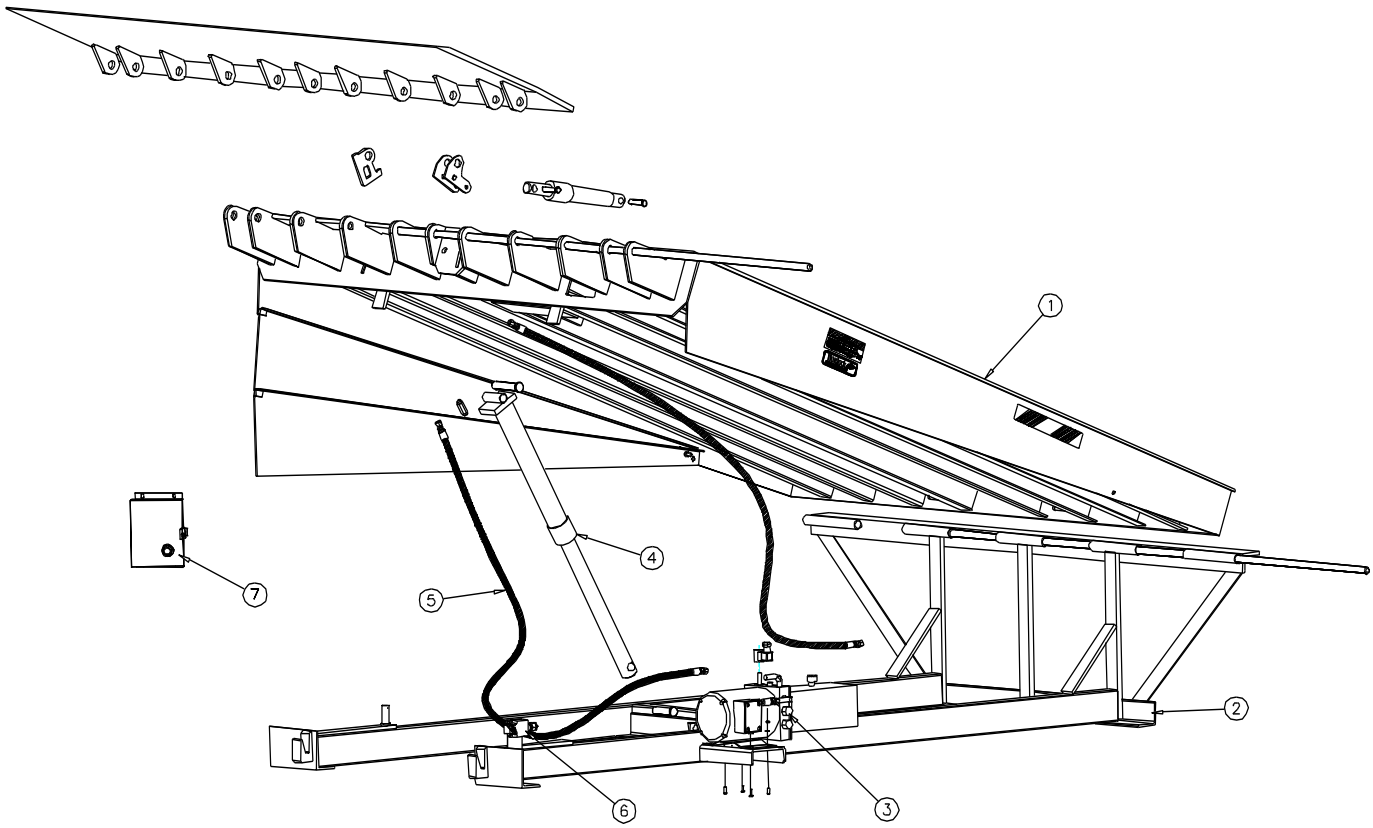

Item Number/ Section	Description
1	Deck and Lip Assembly
2	Frame Assembly
3	Power Pack and Related Hydraulic Components
4	Hydraulic Cylinders
5	Hydraulic Lines and Fittings
6	Optional Equipment
7	Control Panel

Note: Not all parts and weldments are noted in this manual. Only those that are serviceable and /or replaceable will be listed. For additional information on those parts not included in this manual, please contact Nordock. Remember to make note of the model and serial number of the unit for accurate parts and service.

Section 1 – Deck and Lip Assembly

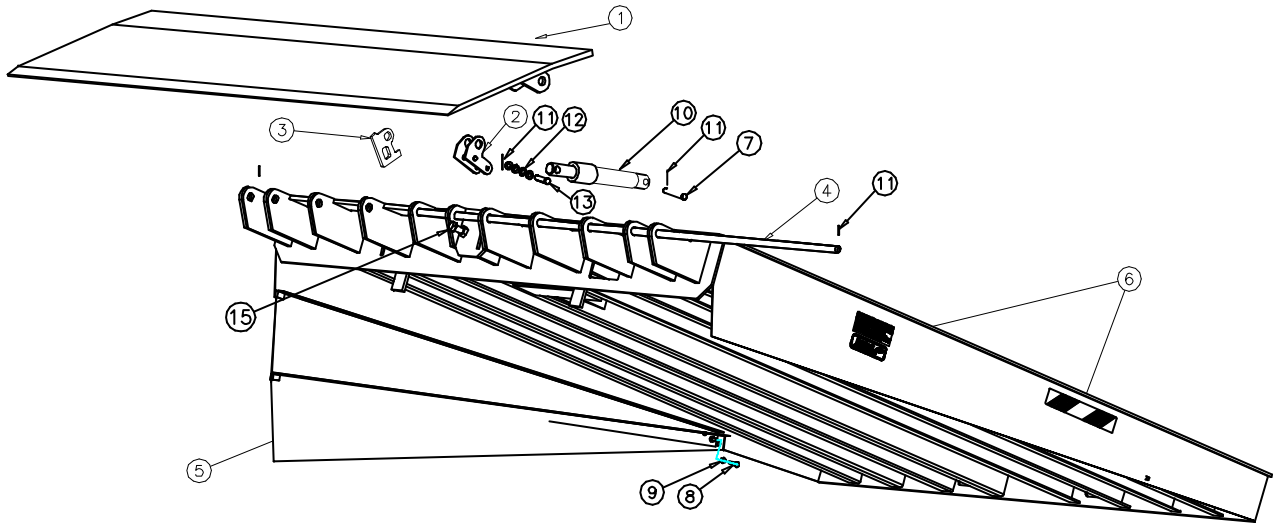

Item	Qty.	Description / Model							Note
1	1	Lip Weldment		P/N					
		Cap.	Length	6’	6.5’	7’	7’T	70”	
		60K	16”	42-1439		42-1547	42-1496		C/F
			18”	42-1440		42-1548	42-1497		
			20”	42-1441		42-1549	42-1498		
		80K	16”	42-1555	42-1587	42-1364	42-1572		
			18”	42-1556	42-1588	42-1365	42-1573		
			20”	42-1557	42-1589	42-1366	42-1574		
								P/N	
2	1	Lip Cam Weldment			60-100K			42-0738	
3	1	Lip Safety Lock Lug			60-80K			43-1036	
4	1	Hinge Rod			6’ Wide Docks, 60K			43-0151	
					6.5’ Wide Docks, 60K			43-0152	
					7’ Wide Docks, 60K			43-0153	
					6’ Wide Docks, 80K			43-0691	
					6.5’ Wide Docks, 80K			43-0692	
					7’ Wide Docks, 80K			43-0693	
5	1	Telescoping Side Skirt Kit – 6’						42-0393	
		Telescoping Side Skirt Kit – 8’						42-0394	
		Telescoping Side Skirt Kit – 10’						42-0395	
6	1	Dock Leveler Decal Kit						42-0392	1
7	1	Cylinder Mount Pin, Clevis Pin 1/2” CRR x 4 1/2” Long						13-3672	
8	2	Bolt, 3/8” - 16 UNC x 1 1/4" Carriage Head						13-0122	
9	2	Nut, 3/8" - 16 Grade 5, Nylock						13-0707	
10	1	Lip Cylinder - 1 1/2”						C1-0009	
		Seal Kit - 1 1/2”						C3-0025	
11	1	Cotter Pin, 1/8” x 1”						13-0171	
12	4	Washer, 1/2" Flat						13-0267	
13	1	Clevis Pin, 1/2" x 3 1/2"						13-0399	
14	2	Bolt, Hex 5/8-11NC x 4” thread full length 60-80K Docks						13-0302	
15	2	Roll Pin, 1/4" x 1 1/2"						13-0313	

NOTE 1: – For correct decal placement, see safety section.

Section 2(a) – 60K Frames

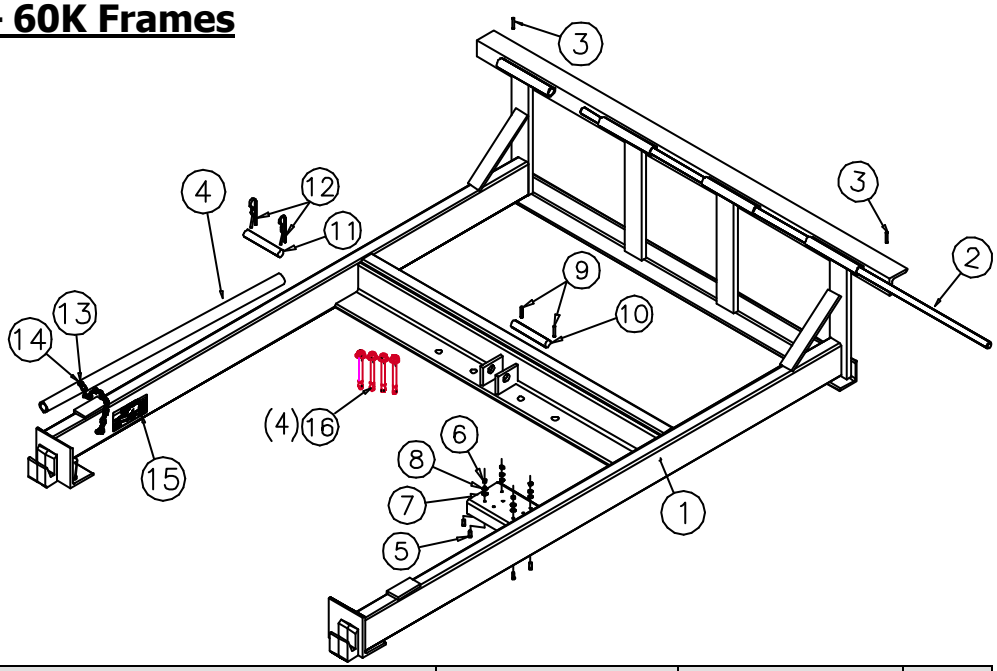

Item	Qty.	Description / Model		P/N 19" Frame	P/N 23" Frame	Note
1	1	Frame Weldment 60K	6 X 6 6 X 8 6 X 10		42-3496 42-3497 42-3498	1
			6.5 X 6 6.5 X 8 6.5 X 10			
			7 X 6 7 X 8 7 X 10	42-3466 42-3467 42-3468	42-3463 42-3464 42-3465	
2	1	Hinge Rod	6' Wide Docks 6.5' Wide Docks 7' Wide Docks		43-0447 43-0448 43-0449	
3	2	1/4" x 2" Roll Pin			13-0555	
4	1	Maintenance/Support Stand	All 19" Frames and 10' Long 23" Frames 6' & 8' Long 23" Frame		43-0600 43-0262	
5	4	Bolt, Hex, 1/4"-20 UNC x 1, Plated			13-0623	
6	4	Nut, 1/4"-20 UNC, Plated			13-0334	
7	4	Washer, 1/4"-SAE Flat, Plated			13-0272	
8	4	Washer, 1/4" Lock, Plated			13-0335	
9	2	Cotter Pin, 1/4" x 1 3/4"			13-0992	
10	1	Lower Cylinder Mount Pin, 5 ¼" long Optional St. St. Pin			43-0311 43-1035	
11	1	Upper Cylinder Mount Pin, 6 ¾" long Optional St. St. Pin			43-0310 43-1027	
12	2	Hairpin Cotter, 7/8" Eye x 4" Long, Plated			13-3579	
13	1	Washer, ¼" Fender, Plated			13-0271	
14	1	Screw, ¼" -14 x 1, Tek, Hex Head, plated			13-0273	
15	1	Decal, Dock leveler, Lock-Out Tag-Out			43-1287	
16	4	Anchor, Wedge, ¾" x 5 ½" long, plated			13-4569	

Note 1 – The standard rear frame angle width is 4". Angle widths may vary to suit pit length. Please consult factory when ordering replacement frames.

Section 2(b) – 80-100K Frames

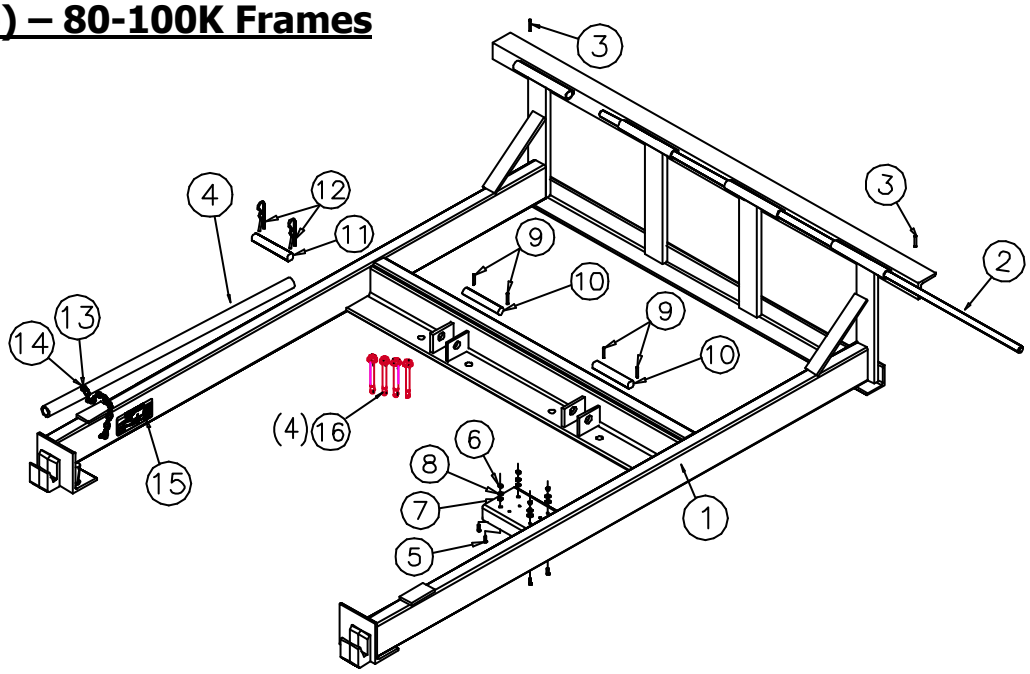

Item	Qty.	Description / Model		19″ Frame	23″ Frame	Note
1	1	Frame Weldment	6 X 6 6 X 8 6 X 10	42-3493 42-3494 42-3495	42-3487 42-3488 42-3499	1
			6.5 X 6 6.5 X 8 6.5 X 10		42-3490 42-3491 42-3492	
			7 X 6 7 X 8 7 X 10	42-3457 42-3458 42-3459	42-3478 42-3479 42-3480	
2	1	Hinge Rod, 60-100K	6’ Wide Docks 6.5’ Wide Docks 7’ Wide Docks		43-0447 43-0448 43-0449	
3	2	Roll Pin, 1/4" x 1 1/2"			13-0313	
4	1	Maintenance/Support Stand	All 19” Frames 10’ Long 23” Frame 6’ & 8’ Long 23” Frame		43-0600 43-0600 43-0262	
5	4	Bolt, Hex, 1/4”-20 UNC x 1, Plated			13-0623	
6	4	Nut, 1/4”-20 UNC, Plated			13-0334	
7	4	Washer, 1/4”-SAE Flat, Plated			13-0272	
8		Washer, 1/4” Lock, Plated			13-0335	
9	4	Cotter Pin, 1/4” x 1 ¾” long			13-0992	
10	2	Lower Cylinder Mount Pin, 4 ½” long Optional St St Pin			43-0312 43-1028	
11	2	Upper Cylinder Mount Pin, 6 3/4” long Optional St St Pin			43-0310 43-1027	
12	4	Hairpin Cotter, 7/8” Eye x 4" Long, Plated			13-3579	
13	1	Washer, ¼” Fender, Plated			13-0271	
14	1	Screw, ¼” -14 x 1, Tek, Hex Head, plated			13-0273	
15	1	Decal, Dock leveler, Lock-Out Tag-Out			43-1287	
16	4	Anchor, Wedge, ¾” x 5 ½” long, plated			13-4569	

Note 1 – The standard rear frame angle width is 4”. Angle widths may vary to suit pit length. Please consult factory when ordering replacement frames.

Section 3 – Power Pack and Related Hydraulic Components

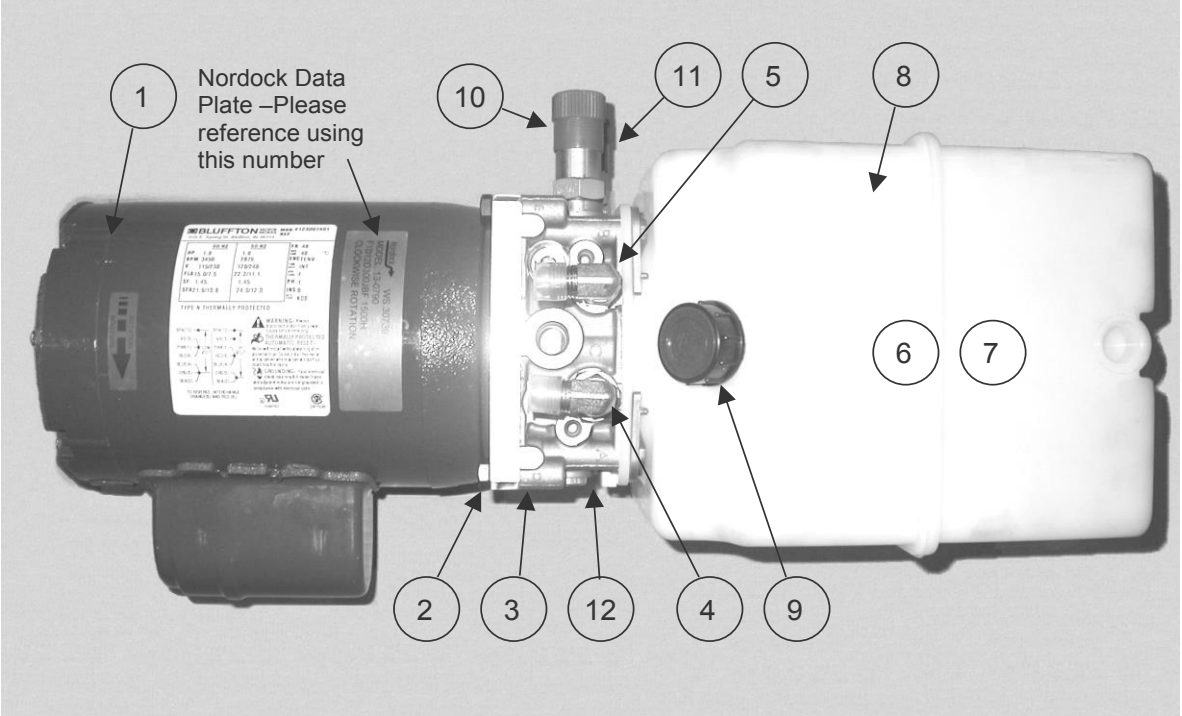

Item	Qty.	Description / Model		P/N	Note
		Complete Power Pack Assembly (Pts 1-12 below)	115 / 230 V 1 Ph 230 / 460 V 3 Ph 575 V 3 Ph	13-0793 13-0794 13-0795	
Power Pack Components:					
1	1	Drive Motor	115 / 230 v. 1 PH 230 / 460 v. 3 PH 575 v. 3 Ph		1
2	1	Motor Coupler	Standard Duty		
3	1	Manifold Assembly	Standard Duty		
4	1	Hydraulic Coupler, 90° FSwivel 3/8” NPT to #6 MJIC, Deck Lift Port			
5	1	Hydraulic Coupler, 90° FSwivel 3/8” NPT to #6 MJIC, Lip Extend Port			
6	1	Pump Assembly (Inside Tank)			
7	1	Oil Pickup Screen and Tube (Inside Tank)			
8	1	Hydraulic Oil Reservoir		13-2824	
9	1	Filler / Vent Cap		13-3596	
10	1	Sequence Valve Cartridge		13-2419	
11	1	Pressure Relief Valve Cartridge		13-3332	
12	1	Flow Control Valve, Adjusting Needle w O-Ring & Nut		13-3341	

Note 1 – Consult factory when ordering individual power pack components.

Section 4 – Hydraulic Cylinders

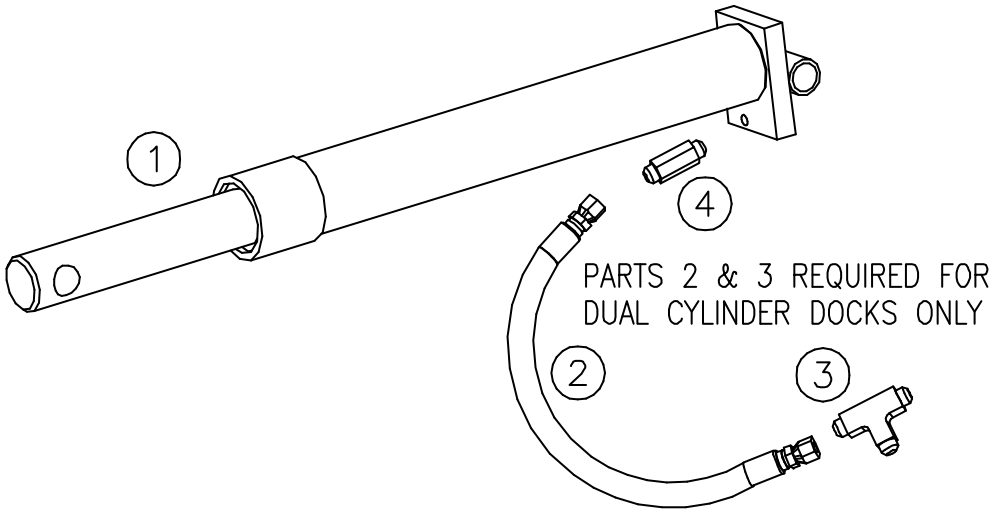

Item	Qty.	Description	Capacity	Dock Length	Stroke	P/N	Note
1	1	Deck Lift Cylinder, 3" Diameter	60K, 160K	6' 8' 10'	17" 17" 20"	C1-0007 C1-0007 C1-0008	1
	1	Seal Kit, 3"	60K, 160K	All		C3-0013	
	2	Deck Lift Cylinder, 2" Diameter	80-120K	6' 8' 10'	17" 17" 20	C1-0011 C1-0011 C1-0030	2
	2	Seal Kit, 2"	80-120K	All		C3-0020	
2	2	Hose, required for Dual cylinder docks only, #6 with 2 straight FJIC ends		80-120K Dock x 15" lg. 160K Dock x 20" lg.		42-3817 42-3818	
3	1	Tee Fitting (dual cylinder docks only), #6 JIC				13-0185	
4	A/R	Velocity Fuse (1 required per cylinder)		80-120K Docks, 3 gpm 60K, 160K Docks, 10 gpm		13-0306 13-0307	

Note 1: 160K Dock uses 2-3" Dia. Cylinders **Note 2:** 80K to 120K Docks use 2-2" Dia. Cylinders

Section 5 – Hydraulic Lines and Fittings

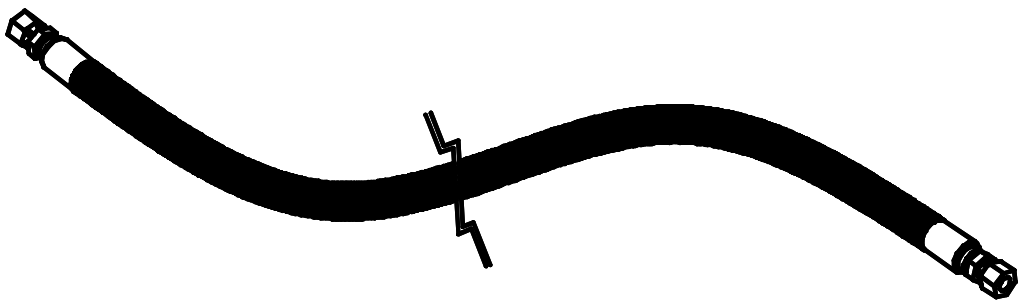

Dock length	Dia.	Description / Model	P/N	Note
6’	3/8”	Deck Lift, x 72” long Lip, ……. x 48” long Hose kit, consisting of 1 each above hoses	42-0383 42-0386 13-1678	1
8’	3/8”	Deck Lift, x 75” long Lip, ……. x 54” long Hose kit, consisting of 1 each above hoses	42-0384 42-0387 13-1677	
10’	3/8”	Deck Lift, x 87” Long Lip, ……. x 78” long	42-0385 42-0388	
Emergency Stop:				
All	3/8”	Tank to Valve, 18” Long	13-3370	1
6’	3/8”	Deck Lift, 58” Long	42-1354	
8’	3/8”	Deck Lift, 61” Long	42-1353	
10’	3/8”	Deck Lift	42-1363	
Optional Remote Mount Power Pack, standard length:				
All	3/8”	Deck Lift & Lip, x 20’-0” long (2 hoses)	42-1545	1

Note 1: All hoses are #6 with 2 straight FJIC ends

Lip Extend/Emergency Stop Valve:

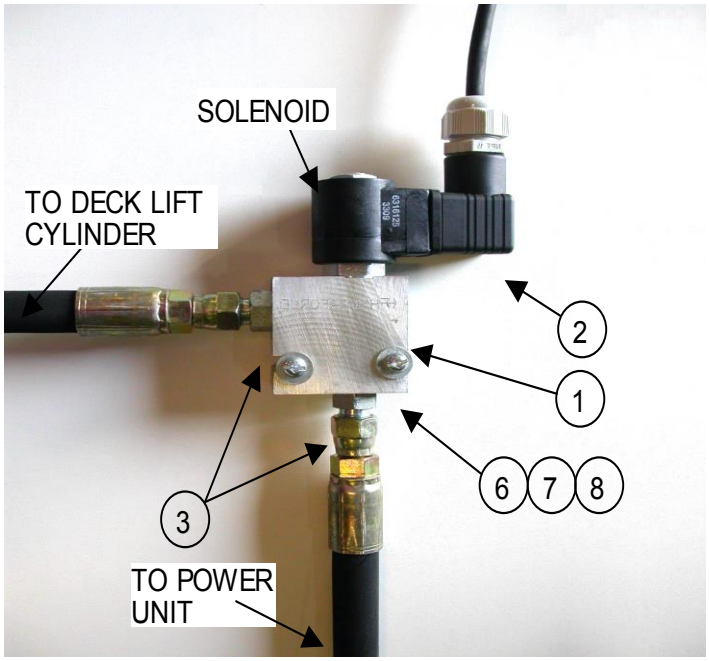

Item	Qty.	Description / Location		P/N	Note
1	1	Solenoid Valve / Rear Frame Brace	Complete Assembly Solenoid only	13-0826 13-0595	
2	1	Receptacle, solenoid valve, Hershman		13-2371	
3	2	Hydraulic Fitting, Str. #6 JICM / 9/16 M ORB		13-0609	
4	1	Pushbutton / Control Panel, Lip Extend (not shown)		13-0317	
5	1	Mushroom Pushbutton, / Control Panel, Emergency Stop Button (not shown)		13-0318	
6	2	Screw, #10-24 x 1 ½” long, plated, combo head		13-0274	
7	2	Washer, Lock, #10, plated		13-0948	
8	2	Washer, Flat, #10, plated		13-1956	

Note: See Section 5 for the hydraulic lines required for the Lip Extend/Emergency Stop valve.

Section 6 – Optional Equipment

Option	Qty.	Description / Location	P/N	Note
Auto Return	1	Limit Switch / Located on Frame Rail	13-0298	
	1	Timer / Control Panel	13-0156	
	1	On / Off Selector / Control Panel	13-0316	
Dock Store	1	Limit Switch / Located on Frame Rail	13-0298	
Bumpers	2	Standard Bumper, AF410-11	61-0001	1
Weather Seals	6’	Brush Seal and Mounting Extrusion Kit	13-0025	
	8’	Brush Seal and Mounting Extrusion Kit	13-0024	
	10’	Brush Seal and Mounting Extrusion Kit (3 pc)	13-0024	
Remote Mount Power Pack	1	Wall Mount Bracket	43-0428	
	4	Bolt, Hex, 1/4" – 20 UNC x 1”	13-0623	
	4	Nut, 1/4" – 20 UNC, Plated	13-0334	
	4	Washer, 1/4" SAE Flat	13-0272	
	4	Washer, 1/4” Lock	13-0335	

Note 1 – For custom bumper sizes and applications, please contact your nearest Nordock representative or call 1-866-885-4276.

Section 7 – Control Panels

Volts/Ph.	Description / Style	P/N	Note
115/1/60	Standard, 3 Button – Deck Raise, Lip Extend, and Emergency Stop	13-1132	
	Optional:		
	4 Button – Deck Raise, Lip Extend and Emergency Stop, Auto Return	13-1350	
208/1/60	Standard, 3 Button – Deck Raise, Lip Extend, and Emergency Stop	13-2625	
	Optional:		
	4 Button – Deck Raise, Lip Extend and Emergency Stop, Auto Return	13-3017	
230/1/60	Standard, 3 Button – Deck Raise, Lip Extend, and Emergency Stop	13-2626	
	Optional:		
	4 Button – Deck Raise, Lip Extend and Emergency Stop, Auto Return	13-1982	
208/3/60	Standard, 3 Button – Deck Raise, Lip Extend, and Emergency Stop	13-2402	
	Optional:		
	4 Button – Deck Raise, Lip Extend and Emergency Stop, Auto Return	13-1243	
230/3/60	Standard, 3 Button – Deck Raise, Lip Extend, and Emergency Stop	13-2382	
	Optional:		
	4 Button – Deck Raise, Lip Extend and Emergency Stop, Auto Return	13-3574	
460/3/60	Standard, 3 Button – Deck Raise, Lip Extend, and Emergency Stop	13-2500	
	Optional:		
	4 Button – Deck Raise, Lip Extend and Emergency Stop, Auto Return	13-2426	
575/3/60	Standard, 3 Button – Deck Raise, Lip Extend, and Emergency Stop	43-0261	
	Optional:		
	4 Button – Deck Raise, Lip Extend and Emergency Stop, Auto Return	13-3784	

Note 1 – All panels higher than 115V have a reduced voltage secondary to 115V.

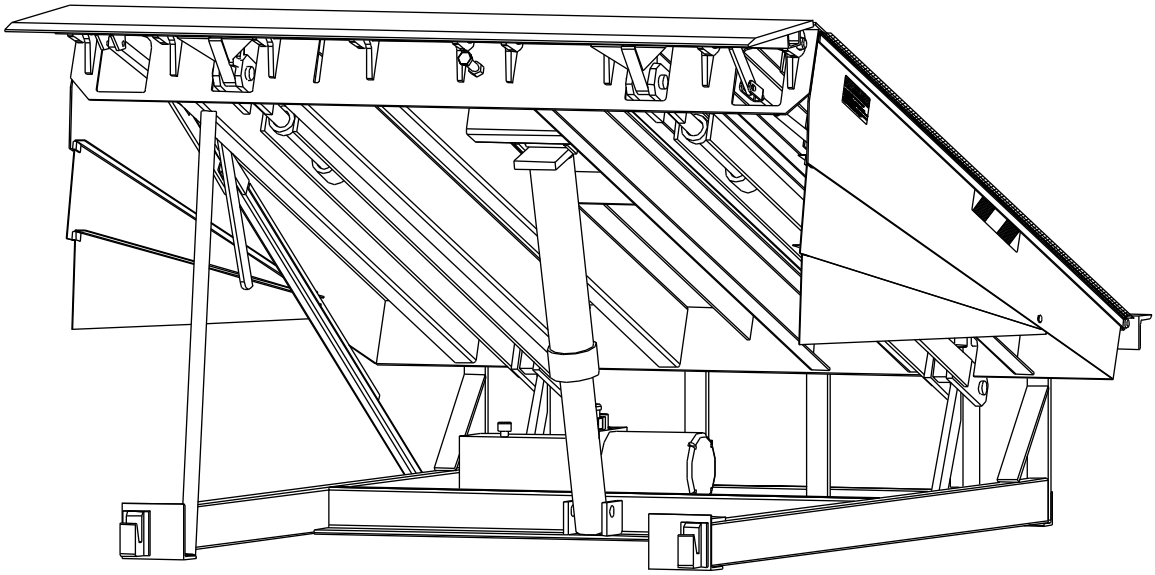

FLEX-LIP® Series
Hydraulic Powered Dock Leveler
Model (SHF)
25,000 to 50,000 lbs. Capacity

Parts Manual

This manual applies to dock levelers manufactured on or after October 2018 with Serial Numbers greater than 44336.

P/N: 49-0232-B

NORDOCK INC.
Website: nordockinc.com ~ Email: sales@nordockinc.com ~ Toll free: 866-885-4276
Nordock Inc. reserves the right to make changes to specifications without notice or obligation. Nordock products are covered by U.S. Patents: 7,384,229; 7,162,762; 7,013,519; 6,912,750; 6,834,409 and U.S. and foreign pending applications.

Parts and Service Tables

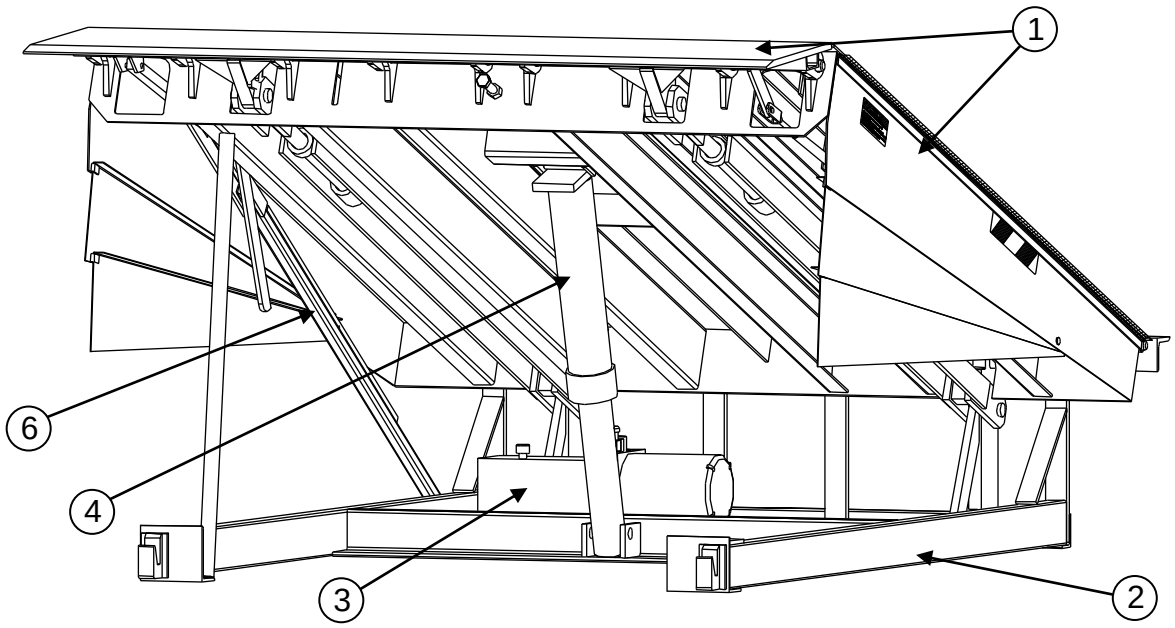

Item Number/ Section	Description
1	Deck and Lip Assemblies
2	Frame Assembly
3	Power Pack and Related Hydraulic Components
4	Hydraulic Lift Cylinder
5	Hydraulic Lines and Fittings (not shown)
6	Lip Extension Mechanism
7	Optional Equipment (not shown)
8	Control Panel (not shown)

Note: Not all parts and weldments are noted in this manual. Only those that are serviceable and /or replaceable will be listed. For additional information on those parts not included in this manual, please contact Nordock. Remember to make note of the model and serial number of the unit for accurate parts and service.

Section 1 – Deck and Lip Assembly

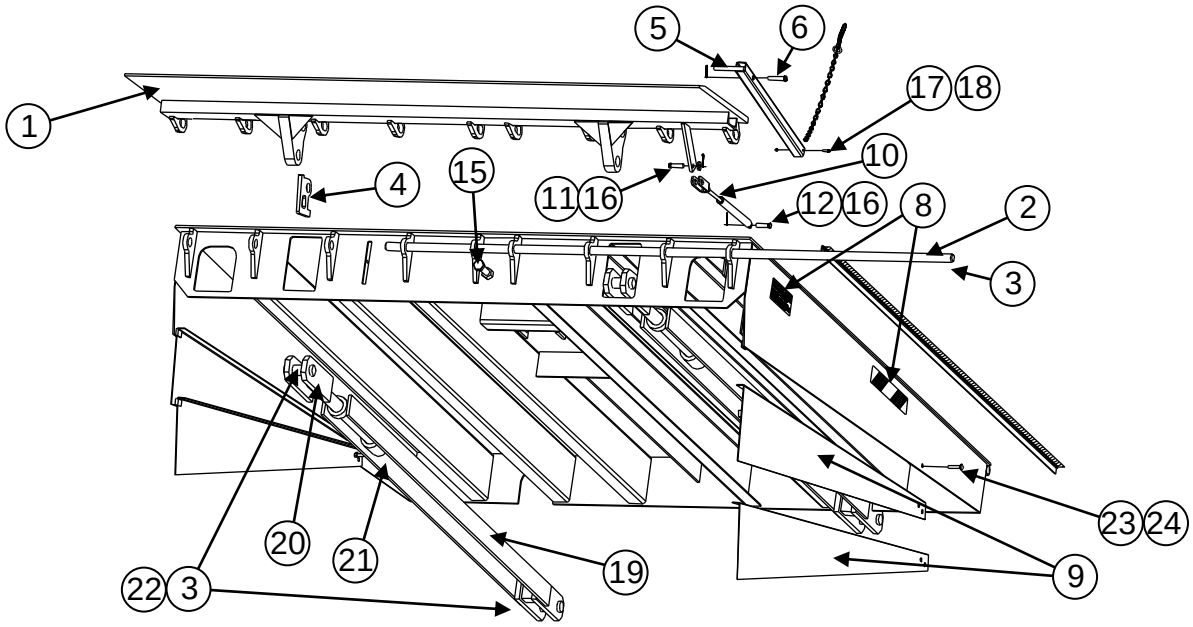

Item	Qty.	Description / Model							Note
1	1	Lip Weldment							
		Capacity	Length	P/N					
				6’	6.5’	7’	7’T	70”	
		20-25K	16”	42-2819	42-2828	42-2837	42-2846	42-2810	
			18”	42-2820	42-2829	42-2838	42-2847	42-2811	
			20”	42-2821	42-2830	42-2839	42-2848	42-2812	
		30-35K	16”	42-2822	42-2831	42-2840	42-2849	42-2813	
			18”	42-2823	42-2832	42-2841	42-2850	42-2814	
			20”	42-2824	42-2833	42-2842	42-2851	42-2815	
		40K	16”	42-3164	42-3167	42-3170	42-3173	42-3161	
			18”	42-3165	42-3168	42-3171	42-3174	42-3162	
			20”	42-3166	42-3169	42-3172	42-3175	42-3163	
		45-50K	16”	42-2825	42-2834	42-2843	42-2852	42-2816	
			18”	42-2826	42-2835	42-2844	42-2853	42-2817	
			20”	42-2827	42-2836	42-2845	42-2854	42-2818	
2	1	Lip Hinge Rod		43-1333	43-1334	43-1177	43-1177		

Item	Qty.	Description / Model			P/N	Note
3	10	Cotter Pin, 1/4” x 1-3/4” Lg.			13-0992	
4	1	Lip Safety Lock Lug			43-1165	
5	1	Below Dock Control Lever – Handle to Lip			42-2016	
6	1	Clevis Pin – Lip Extend, 1/2” x 2-1/4” Lg.			13-0288	
7	1	Below Dock Control Chain – Deck to Handle (15”)			42-0299	
8	1	Dock leveler Decal Kit			42-0392	1
9	1	Telescoping Side Skirt Kit	6’ Long Docks 8’ Long Docks 10’ Long Docks		42-0393 42-0394 42-0395	
10	1	Gas Spring – Lip Extend c/w Clevis End			42-1568	
11	1	Clevis Pin – Gas Spring to Lip 1/2” x 1-1/4” Lg.			13-2111	
12	1	Clevis Pin – Gas Spring to Deck 3/8” x 1-5/8” Lg.			13-0500	
13	3	Cotter Pin – 1/8” x 1” Lg.			13-0171	
14	2	Washer, 3/8” SAE Flat			13-0203	
15	1	Lip Stop Bolt			13-0302	
16	1	Washer, 1/2”, plated			13-0267	
17	1	Screw, 10-24 x 1” Lg., plated			13-0841	
18	1	Nut, Nylock, 10-24 plated			13-1858	
19	2	Tension Rod Sleeve	6’	20-35K 40-50K	42-2807 42-2804	
			8’	20-35K 40-50K	42-2803 42-2801	
			10’	20-35K 40-50K	42-2808 42-2806	
20	2	Tension Rod Threaded		20-35K 40-50K	42-2802 42-2800	
21	2	Nut		20-35K 40-50K	13-2822 42-3210	
22	4	Tension Rod Pivot Pin		20-35K 40-50K	43-1162 43-1152	
23	2	Bolt, 3/8-16 x 1-1/4” Lg., Carriage Head			13-0122	
24	2	Nut, 3/8-16, Grade 5, Nylock			13-0707	

1 – For correct decal placement, see safety section.

Section 2 – Frame

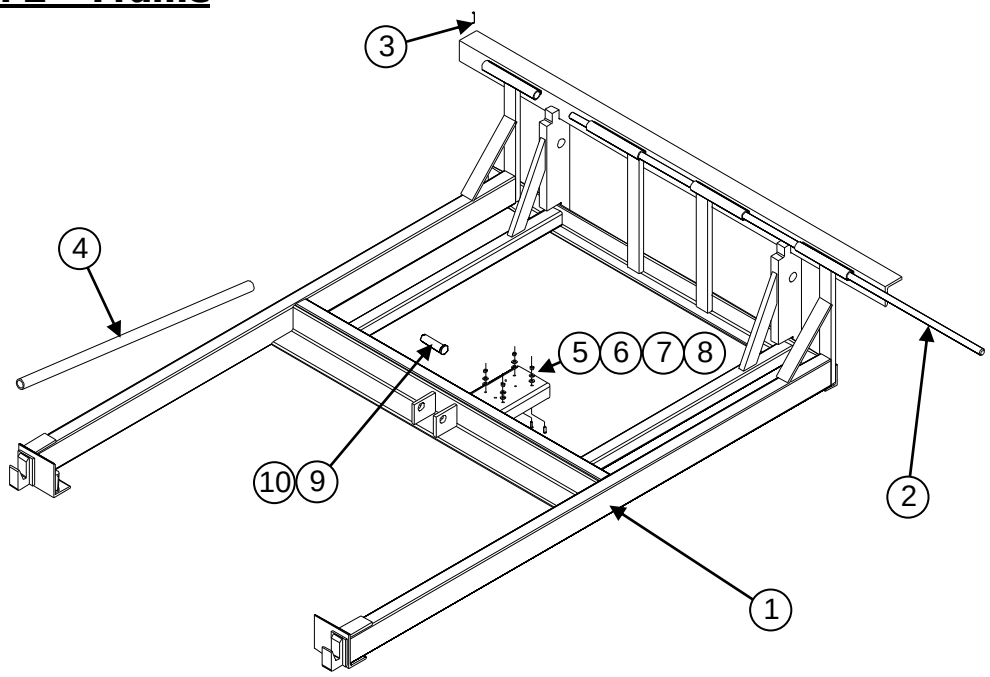

Item	Qty.	Description / Model		P/N	Note
1	1	Frame Weldment		C/F	
2	1	Rear Hinge Rod	6’ Wide Docks 6.5’ Wide Docks 7’ Wide Docks 70” Wide Docks	43-0154 43-0155 43-0156 43-0462	
3	2	1/4" x 2" Roll Pin		13-0555	
4	1	Maintenance / Support Stand		43-0262	
5	4	Bolt, 1/4" - 20 UNC x 1, Plated		13-0623	
6	4	Nut, 1/4" - 20 UNC Plated		13-0334	
7	4	Washer, 1/4" SAE Flat		13-0272	
8	4	Washer, 1/4“ Lock		13-0335	
9	1	Lower Cylinder Pin		43-0312	
10	4	Cotter Pin, 1/4" x 1-3/4" Lg.		13-0992	
11	1	Upper Cylinder Pin (not shown)		43-0310	

C/F – Consult Factory.

Section 3 – Power Pack and Related Hydraulic Components

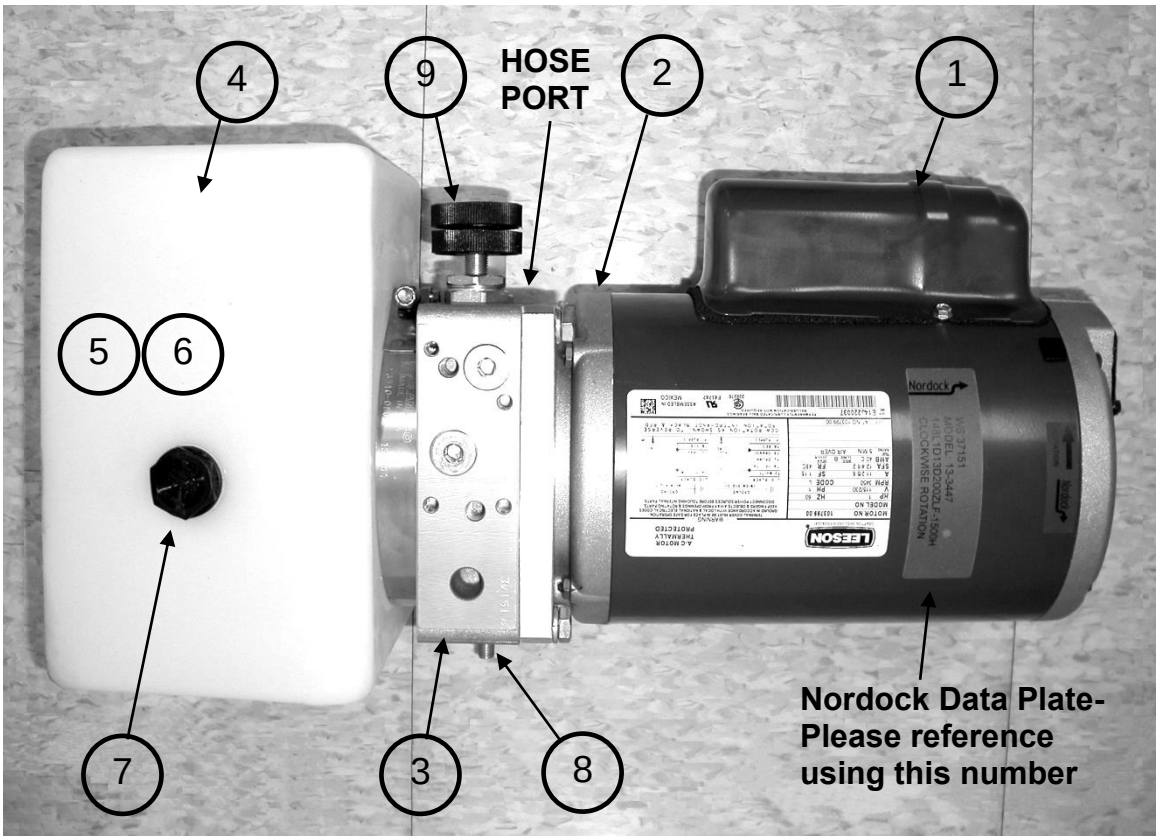

Item	Qty.	Description / Model		P/N	Note
		Complete Power Pack Assembly (Parts 1-9 below)	115 / 230 V 1 Ph 208 / 230 / 460 V 3 Ph 575 V 3 Ph	13-3447 13-3448 13-3449	
Power Pack Components:					
1	1	Drive Motor	115 / 230 v. 1 PH 230 / 460 v. 3 PH 575 v. 3 Ph		1
2	1	Motor Coupler	Standard Duty		
3	1	Manifold Assembly	Standard Duty		
4	1	Hydraulic Oil Reservoir			
5	1	Pump Assembly (Inside Tank)			
6	1	Oil Pickup Screen and Tube (Inside Tank)			
7	1	Cap, Filler/ Vent			
8	1	Pressure Relief Valve Cartridge			
9	1	Flow Control Valve			

Note 1 – Consult factory when ordering individual power pack components.

Section 4 – Hydraulic Cylinders

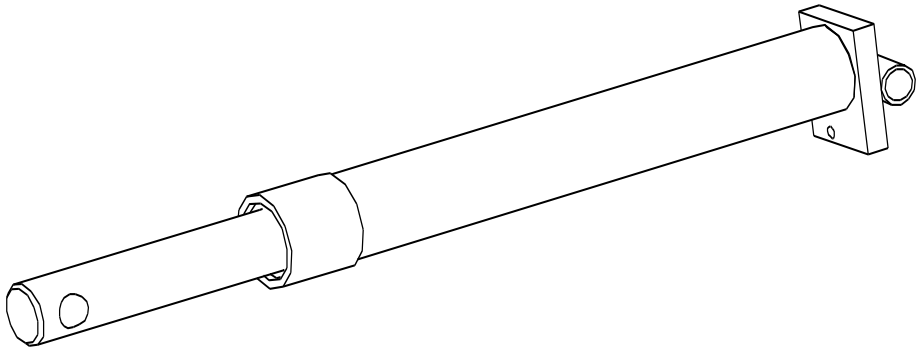

Ram Dia.	Length	Description / Model	P/N	Note
2”	25” Closed	Seal Kit 17” Stroke, Deck Lift Cylinder	C3-0020 C1-0011	

Section 5 – Hydraulic Lines and Fittings

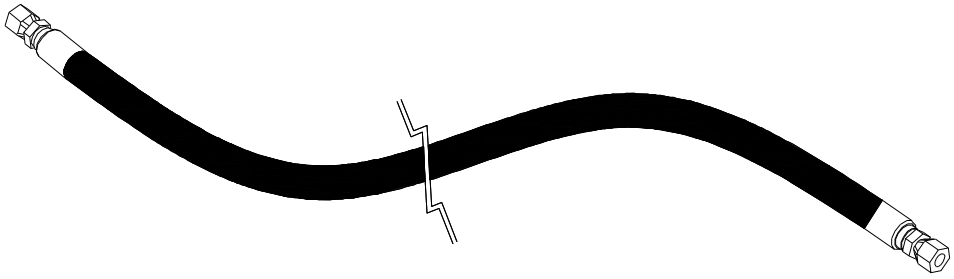

Dock length	Dia.	Description / Model	P/N	Note
6’	3/8”	Deck Lift, x 72” long	42-0383	
8’	3/8”	Deck Lift, x 75” long	42-0384	
10’	3/8”	Deck Lift, x 87” long	42-0385	
Optional Emergency Stop:				
All	3/8”	Hose, Power Unit to Valve, x 24” long	42-1352	
All	3/8”	Hose, Deck Lift, x 72” long	42-0383	

Note: All hoses are #6 with 2 straight FJIC ends

Section 6 – Lip Actuator Assembly

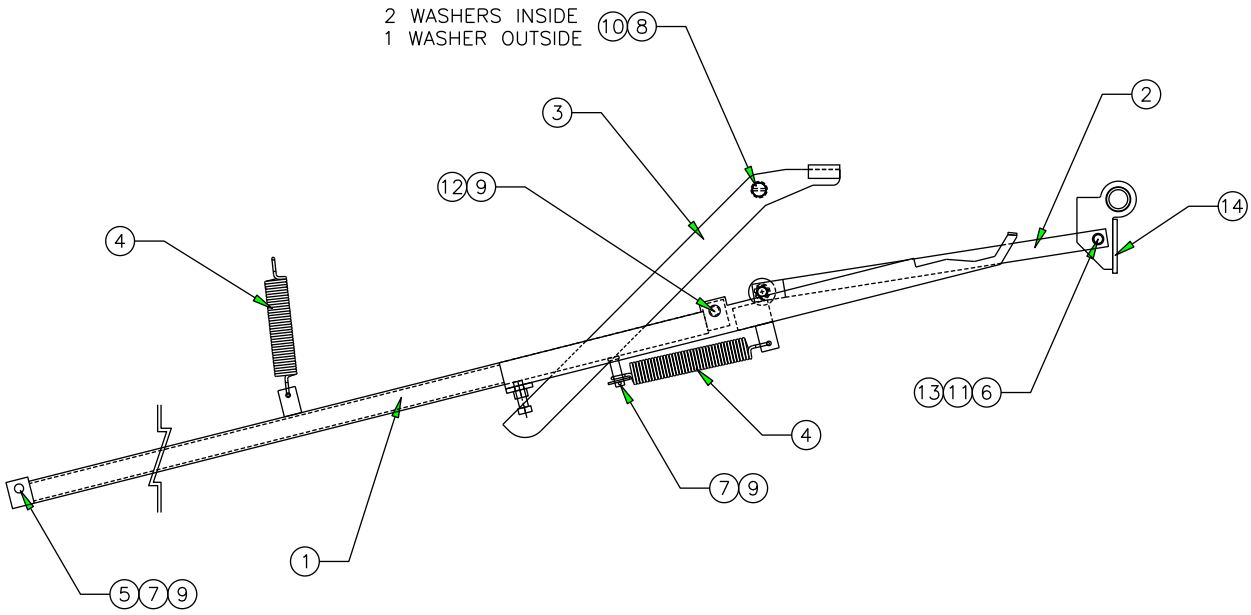

Item	Qty.	Description / Model		P/N	Note
1	1	Rear Push-bar Assembly (includes 4, 7, 9, 12)	6’ Long Dock, 19” Frame 6’ Long Dock, 23” Frame 8’ Long Dock, 19” Frame 8’ Long Dock, 23” Frame 10’ Long Dock, 19” Frame 10’ Long Dock, 23” Frame	42-2245 42-2218 42-2219 42-2220 42-2221 42-2222	
2	1	Front Push-bar Assembly (includes 11)	6’ 8’	42-3825 42-3211	
3	1	Kick-out Lever		42-2182	
4	2	Spring		13-1955	
5	1	Clevis Pin – 1/2” x 2-1/2”, Plated		13-1099	
6	1	Shoulder Bolt – 1/2” x 1-3/4”		13-1801	
7	2	Flat Washer, 1/2”, Plated		13-0267	
8	3	Flat Washer, 3/4”, Plated		13-0649	
9	3	Cotter Pin, 1/8” x 1” Lg.		13-0171	
10	1	Cotter Pin, 1/8” x 1-1/2” Lg.		13-0397	
11	1	Sleeve Bushing, 1/2” ID x 5/8” OD x 1” Lg.		13-0434	
12	1	Clevis Pin, 1/2” x 2-1/4”, Plated		13-0288	
13	1	Hex Nut, 3/8 – 16, Nylock		13-0707	
14	1	Lip Cam		42-3805	
		Assembly (includes items 1-12; lip cam and cam spring selected separately)	6’ Long Dock, 19” Frame 6’ Long Dock, 23” Frame 8’ Long Dock, 19” Frame 8’ Long Dock, 23” Frame 10’ Long Dock, 19” Frame 10’ Long Dock, 23” Frame	42-2249 42-2250 42-2257 42-2258 42-2259 42-2260	

Section 7 – Optional Equipment

Emergency Stop Valve:

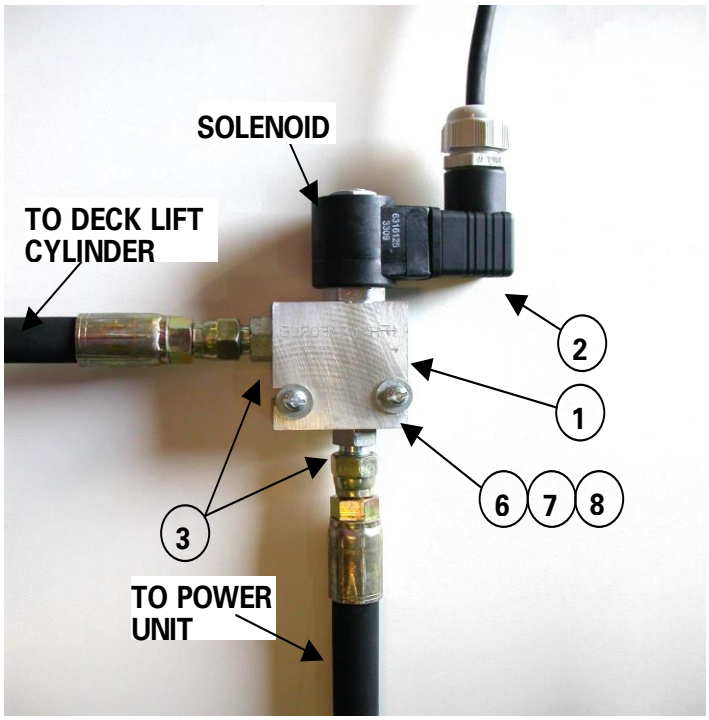

Item	Qty.	Description / Location		P/N	Note
1	1	Solenoid Valve / Rear Frame Brace	Complete Assembly Solenoid only	13-0826 13-0595	
2	1	Receptacle, solenoid valve, Hershman		13-2371	
3	2	Hydraulic Fitting, Str. #6 JICM / 9/16 M ORB		13-1309	
4	1	Pushbutton / Control Panel, Lip Extend (not shown)		13-0317	
5	1	Mushroom Pushbutton, / Control Panel, Emergency Stop Button (not shown)		13-0318	
6	2	Screw, #10-24 x 1-1/2” Lg., plated, combo head		13-0274	
7	2	Washer, Lock, #10, plated		13-0948	
8	2	Washer, Flat, #10, plated		13-1956	

Note: See Section 5 for the hydraulic lines required for the Lip Extend/Emergency Stop valve.

Other Options:

Option	Qty.	Description / Location	P/N	Note
Auto Return	1 1 1	Limit Switch / Located on Frame Rail Timer / Control Panel On / Off Selector / Control Panel	13-0298 13-0156 13-0316	
Bumpers	2	Standard Bumper, AF410-11	61-0001	1
Weather Seals	6’ 8’ 10’	Brush Seal and Mounting Extrusion Kit Brush Seal and Mounting Extrusion Kit Brush Seal and Mounting Extrusion Kit, (3 pc)	61-0025 61-0024 61-0037	
Fall Safe	1	Velocity Fuse / Deck Lift Cylinder	13-0306	
Remote Mount Power Pack	1 4 4 4 4	Wall Mount Bracket Bolt, Hex, 1/4" – 20 UNC x 1” Lg. Nut, 1/4" – 20 UNC, Plated Washer, 1/4" SAE Flat Washer, 1/4” Lock	43-0428 13-0623 13-0334 13-0272 13-0335	

Note 1 – For custom bumper sizes and applications, please contact your nearest Nordock representative or call 1-866-885-4276.

Section 8 – Control Panels

Volts/Ph	Description / Style	P/N	Note
115/1/60	Standard Panel / Single Pushbutton	48-0027	
208/230/1/60	Standard Panel / Single Pushbutton	48-0012	
208/230/3/60	Standard Panel / Single Pushbutton	48-0024	
460/3/60	Standard Panel / Single Pushbutton	48-0020	
575/3/60	Standard Panel / Single Pushbutton	48-0023	

NORDOCK®

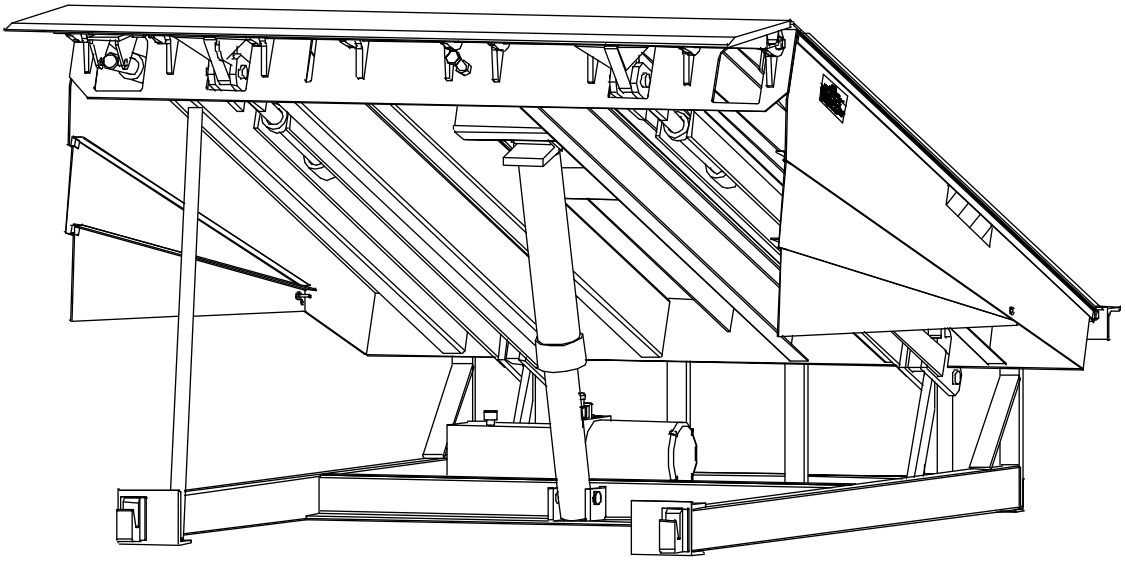

FLEX-LIP® Series
Hydraulic Dock Leveler
Model (SHLF)

25,000 to 50,000 lbs. Capacity

Parts Manual

This manual applies to dock levelers manufactured on or after
October 2018 with Serial Numbers greater than 44336.

P/N: 49-0265-B

NORDOCK INC.
Website: nordockinc.com ~ Email: sales@nordockinc.com ~ Toll free: 866-885-4276
Nordock Incorporated reserves the right to make changes to specifications without notice or obligation.
Nordock products may be covered by various U.S. and foreign patents or pending applications.

Parts and Service Tables

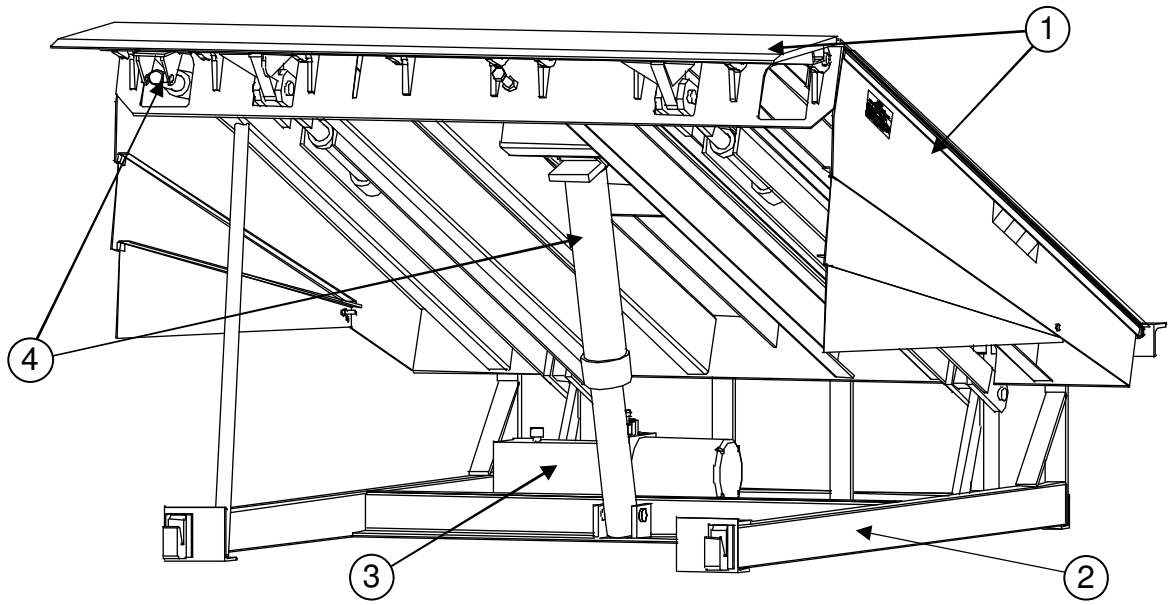

Item Number/ Section	Description
1	Deck and Lip Assembly
2	Frame Assembly
3	Power Pack and Related Hydraulic Components
4	Hydraulic Cylinders
5	Hydraulic Lines and Fittings (not shown)
6	Optional Equipment (not shown)
7	Control Panel (not shown)

Note: Not all parts and weldments are noted in this manual. Only those that are serviceable and/or replaceable will be listed. For additional information on those parts not included in this manual, please contact Nordock. Remember to make note of the model and serial number of the unit for accurate parts and service.

Section 1 – Deck and Lip Assembly

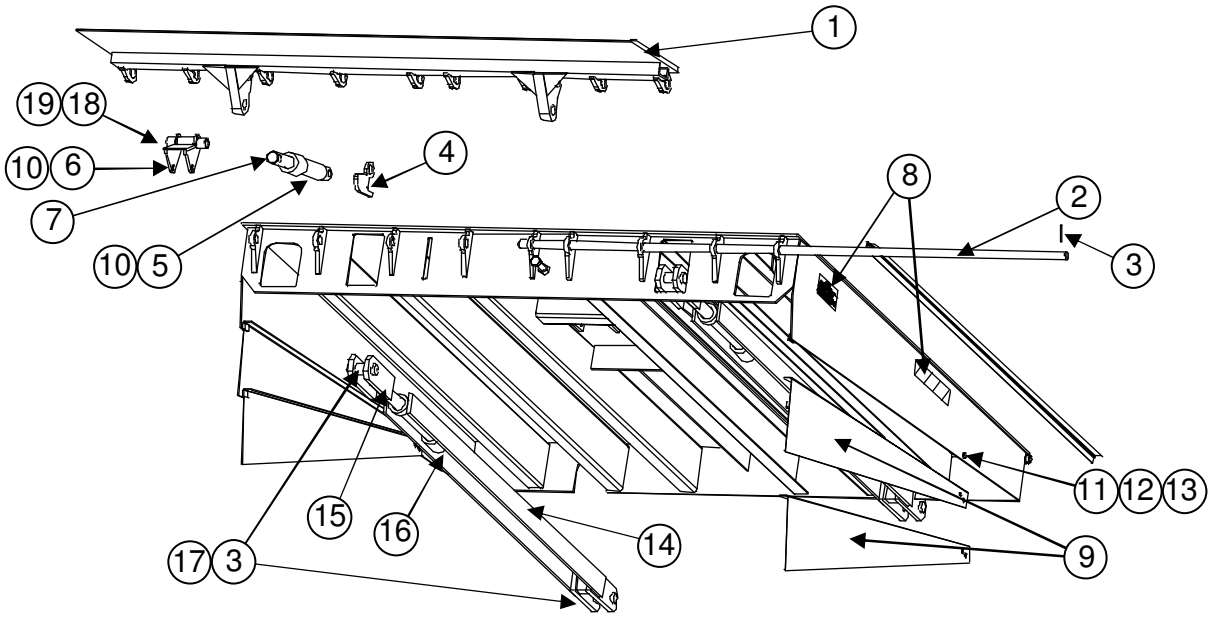

Item	Qty.	Description / Model			Note
1	1	Lip Weldment		C/F	
2	1	Lip Hinge Rod	6' Wide 6.5' Wide 7' Wide	43-1333 43-1334 43-1177	
3	10	Cotter Pin, ¼" x 1¾"		13-0992	
4	1	Lip Safety Lock Lug		43-1165	
5	1	Cylinder Mount Pin, Round, ½" CRR x 5-1/8" lg		43-0309	
6	1	Clevis Pin – Lip Extend, ½" x 3½"		13-0399	
7	1	Lip Cylinder		C1-0009	
8	1	Dock leveler Decal Kit		42-0392	1
9	1 1 1	Telescoping Side Skirt Kit	6' Long Docks 8' Long Docks 10' Long Docks	42-0393 42-0394 42-0395	
10	3	Cotter Pin – 1/8" x 1		13-0171	
11	2	Washer, 3/8" SAE Flat		13-0203	
12	2	Bolt, 3/8"-16 x 1¼" long, Carriage Head		13-0122	
13	2	Nut, 3/8"-16, Nylock		13-0707	
14	2	Tension Rod Sleeve (not shown)	6' 20-35K 6' 40-50K 8' 20-35K 8' 40-50K 10' 20-35K 10' 40-50K	42-2807 42-2804 42-2803 42-2801 42-2808 42-2806	
15	2	Tension Rod Threaded (not shown)	20-35K 40-50K	42-2802 42-2800	
16	2	Nut (not shown)	20-35K 40-50K	13-2822 42-3210	
17	4	Tension rod pivot pin (not shown)	20-35K 40-50K	43-1162 43-1152	
18	1	Lip cam assembly (c/w bushings #19)		42-3851	
19	2	Flange bushing		13-0508	

1 – For correct decal placement, see safety section.
C/F – Consult Factory

Section 2 – Frame

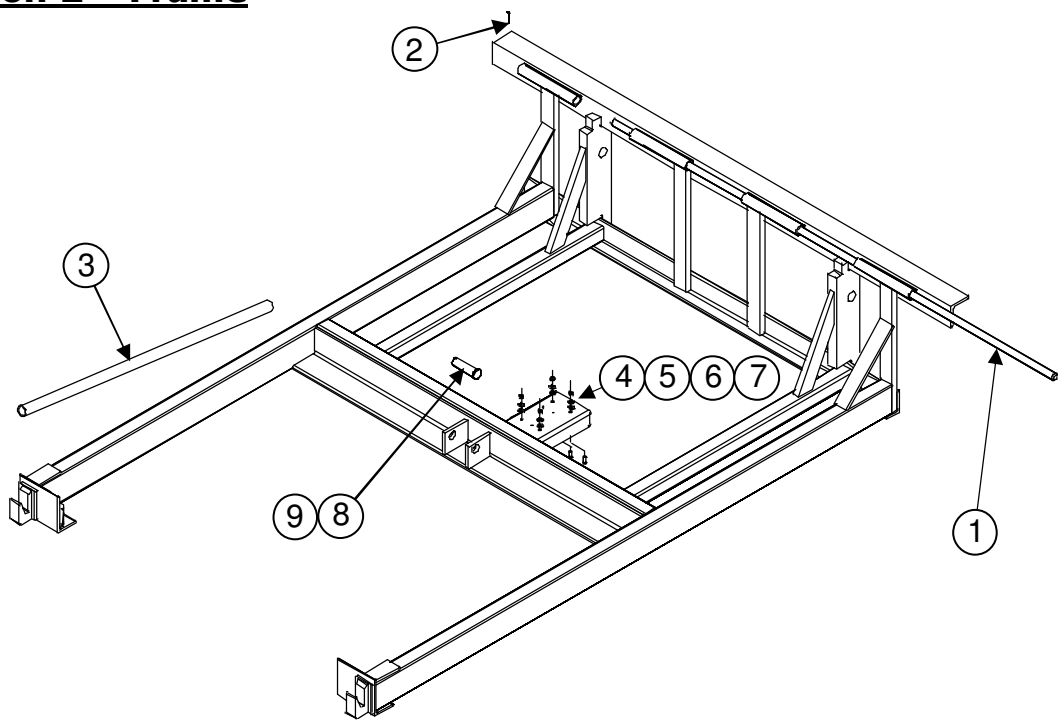

Item	Qty	Description / Model		P/N	Note
1	1	Rear Hinge Rod	6’ Wide Docks 6.5’ Wide Docks 7’ Wide Docks	43-0154 43-0155 43-0156	
2	2	1/4" x 2" Roll Pin		13-0555	
3	2	Maintenance / Support Stand (Std. Dock)		43-0262	
4	4	Bolt, 1/4" - 20 UNC x 1, Plated		13-0623	
5	4	Nut, 1/4" - 20 UNC Plated		13-0334	
6	4	Washer, ¼" SAE Flat		13-0272	
7	4	Washer, ¼“ Lock		13-0335	
8	1	Lower Cylinder Pin ~ 4-1/2” Lg.		43-0312	
9	4	Cotter Pin, ¼" x 1¾"		13-0304	
10	1	Upper Cylinder Pin (not shown)		43-0310	

Section 3 – Power Pack and Related Hydraulic Components

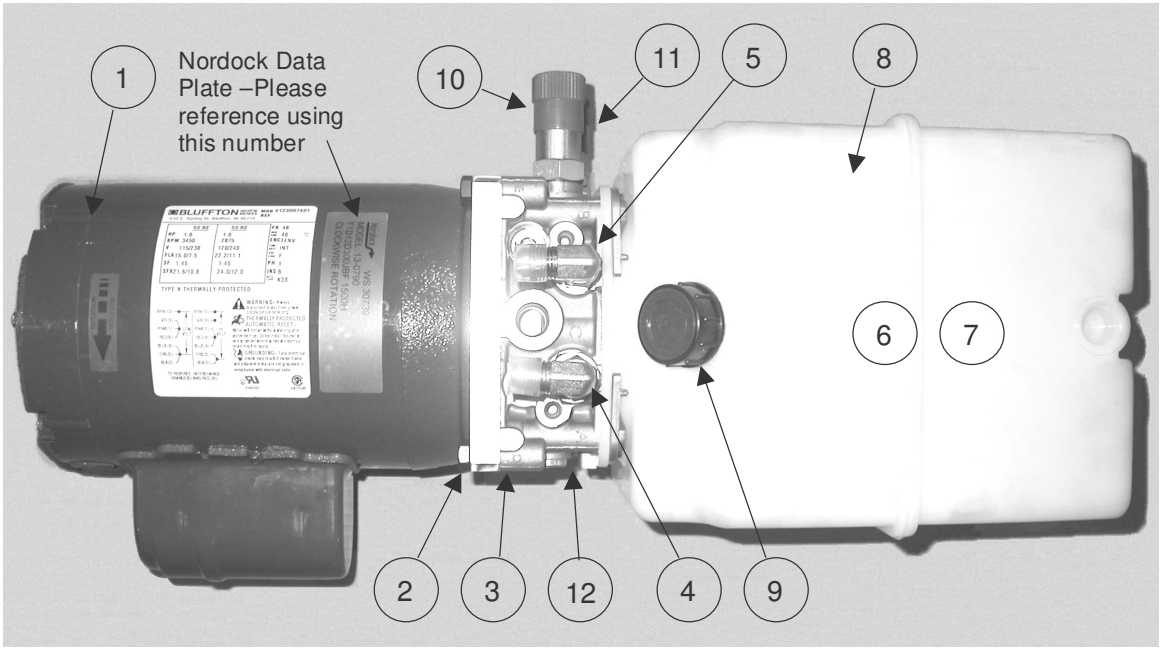

Item	Qty	Description / Model		P/N	Note
		Complete Power Pack Assembly (Pts 1-12 below)	115 / 230 V 1 Ph 230 / 460 V 3 Ph 575 V 3 Ph	13-0790 13-0791 13-0792	
Power Pack Components:					
1	1	Drive Motor	115 / 230 v. 1 PH 230 / 460 v. 3 PH 575 v. 3 Ph		1
2	1	Motor Coupler	Standard Duty		
3	1	Manifold Assembly	Standard Duty		
4	1	Hydraulic Fitting, 90° 3/8” FNPT x #6MJIC, Deck Lift Port			
5	1	Hydraulic Fitting, 90° 3/8” FNPT x #6MJIC, Lip Ext. Port			
6	1	Pump Assembly (Inside Tank)			
7	1	Oil Pickup Screen and Tube (Inside Tank)			
8	1	Hydraulic Oil Reservoir			
9	1	Filler / Vent Cap			
10	1	Sequence Valve Cartridge			
11	1	Pressure Relief Valve Cartridge			
12	1	Flow Control Valve			

Note 1 – Consult factory when ordering individual power pack components.

Section 4 – Hydraulic Cylinders

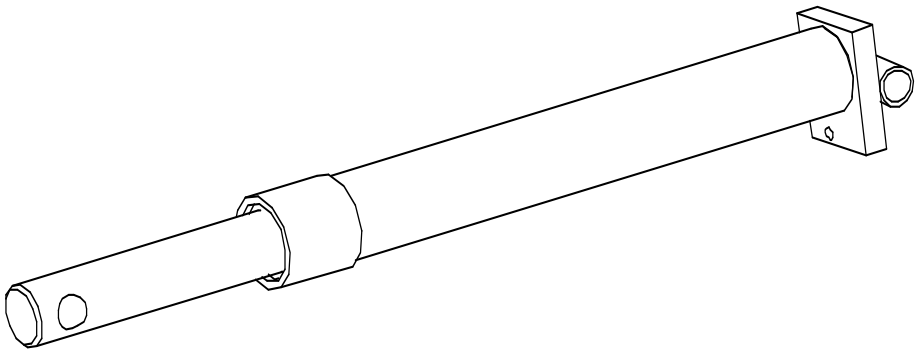

Ram Dia.	Length	Description / Model		P/N	Note
2”		Seal Kit, all cylinders		C3-0020	
	25” Closed 28” Closed	Deck Lift Cylinder	17” Stroke 20” Stroke, all 10’ Docks	C1-0011 C1-0030	

Section 5 – Hydraulic Lines and Fittings

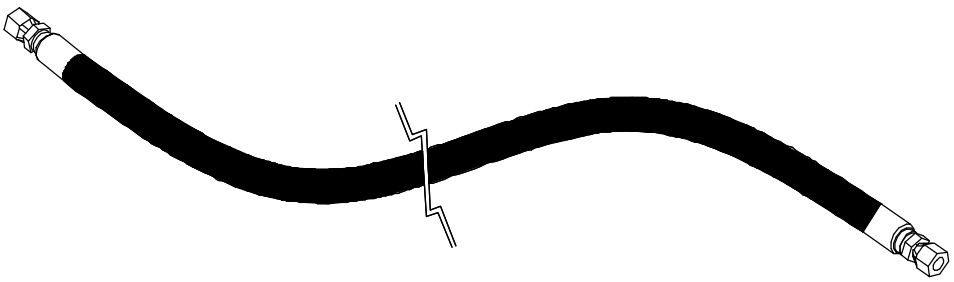

Dock length	Dia.	Description / Model	P/N	Note
6’	3/8”	Deck Lift, x 72” long Lip, ……. x 48” long Hose kit, consisting of 1 each above hoses	42-0383 42-0386 13-1678	
8’	3/8”	Deck Lift, x 75” long Lip, ……. x 54” long Hose kit, consisting of 1 each above hoses	42-0384 42-0387 13-1677	
10’	3/8”	Deck Lift, x 87” long Lip, ……. x 78” long	42-0385 42-0388	
Optional Emergency Stop:				
All	3/8”	Hose, Power Unit to Valve, x 24” long	42-1352	
All	3/8”	Hose, Deck Lift, x 72” long	42-0383	
Optional Remote Mount Power Pack, standard length:				
All	3/8”	Hose, Deck Lift & Lip, x 20’-0” long (2 hoses)	42-1545	

Note: All hoses are #6 with 2 straight FJIC ends

Section 6 – Optional Equipment

Lip Extend/Emergency Stop Valve:

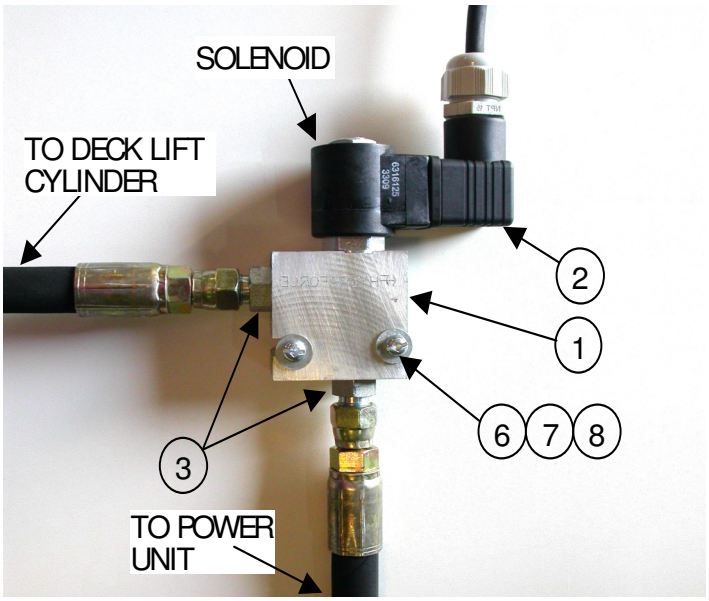

Item	Qty	Description / Location		P/N	Note
1	1	Solenoid Valve / Rear Frame Brace	Complete Assembly Solenoid only	13-0826 13-0175	
2	1	Receptacle, solenoid valve, Hershman		13-2371	
3	2	Hydraulic Fitting, Str. #6 JICM / 9/16 M ORB		13-1309	
4	1	Pushbutton / Control Panel, Lip Extend (not shown)		13-0317	
5	1	Mushroom Pushbutton, / Control Panel, Emergency Stop Button (not shown)		13-0318	
6	2	Screw, #10-24 x 1 ½" long, plated, combo head		13-0274	
7	2	Washer, Lock, #10, plated		13-0948	
8	2	Washer, Flat, #10, plated		13-1956	

Note: See Section 5 for the hydraulic lines required for the Lip Extend/Emergency Stop valve.

Other Options:

Option	Qty.	Description / Location	P/N	Note
Auto Return	1 1 1	Limit Switch / Located on Frame Rail Timer / Control Panel On / Off Selector / Control Panel	13-0298 13-0156 13-0316	
Bumpers	2	Standard Bumper, AF410-11	61-0001	1
Weather Seals	6' 8' 10'	Brush Seal and Mounting Extrusion Kit Brush Seal and Mounting Extrusion Kit Brush Seal and Mounting Extrusion Kit, (3 pc)	61-0025 61-0024 61-0037	
Fall Safe	1	Velocity Fuse / Deck Lift Cylinder	13-0306	
Remote Mount Power Pack	1 4 4 4 4	Wall Mount Bracket Bolt, Hex, 1/4" – 20 UNC x 1" Nut, 1/4" – 20 UNC, Plated Washer, 1/4" SAE Flat Washer, 1/4" Lock	43-0428 13-0623 13-0334 13-0272 13-0335	

Note 1 – For custom bumper sizes and applications, please contact your nearest Nordock representative or call 1-866-885-4276.

Section 7 – Control Panels

Volts/Ph	Description / Style	P/N	Note
115/1/60	Standard Panel / Single Pushbutton	48-0027	
	2 Button – Deck Raise and On/Off Switch	13-1980	
	3 Button – Deck Raise, Lip Extend, and Emergency Stop	13-1132	
	4 Button – Deck Raise, On/Off Switch, Lip Extend and Emergency Stop	13-1350	
230/1/60	Standard Panel / Single Pushbutton	48-0005	
	2 Button – Deck Raise and On/Off Switch		
	3 Button – Deck Raise, Lip Extend, and Emergency Stop	13-1982	
	4 Button – Deck Raise, On/Off Switch, Lip Extend and Emergency Stop	48-0004	
208/3/60	Standard Panel / Single Pushbutton	48-0024	
	2 Button – Deck Raise and On/Off Switch	13-1983	
	3 Button – Deck Raise, Lip Extend and Emergency Stop	13-2402	
	4 Button – Deck Raise, On/Off Switch, Lip Extend and Emergency Stop	13-1243	
575/3/60	Standard Panel / Single Pushbutton	48-0023	
	2 Button – Deck Raise and On/Off Switch	13-1154	
	3 Button – Deck Raise, Lip Extend and Emergency Stop	43-0261	
	4 Button – Deck Raise, On/Off Switch, Lip Extend and Emergency Stop	48-0019	
	3 Button – Deck Raise, Lip Extend and Emergency Stop	13-2500	
	4 Button – Deck Raise, On/Off Switch, Lip Extend and Emergency Stop	13-2426	

NORDOCK®



Vertical Storing Hydraulic Dock Leveler Model (NV)

25,000 to 50,000 lbs. Capacity

Parts Manual

This manual applies only to vertical storing dock levelers with the following serial number(s): **50966-50973**

Please note: Deck, lip and frame weldment parts can vary based on leveler dimensions and capacity. Please contact us to determine the right part for this leveler.

54650-OM

NORDOCK INC.

Website: Nordockinc.com ~ Email: Sales@Nordockinc.com ~ Toll free: 866-885-4276

Nordock Inc. reserves the right to make changes to specifications without notice or obligation. Nordock products may be covered by various U.S. and foreign patents or pending applications.

Parts and Service Tables

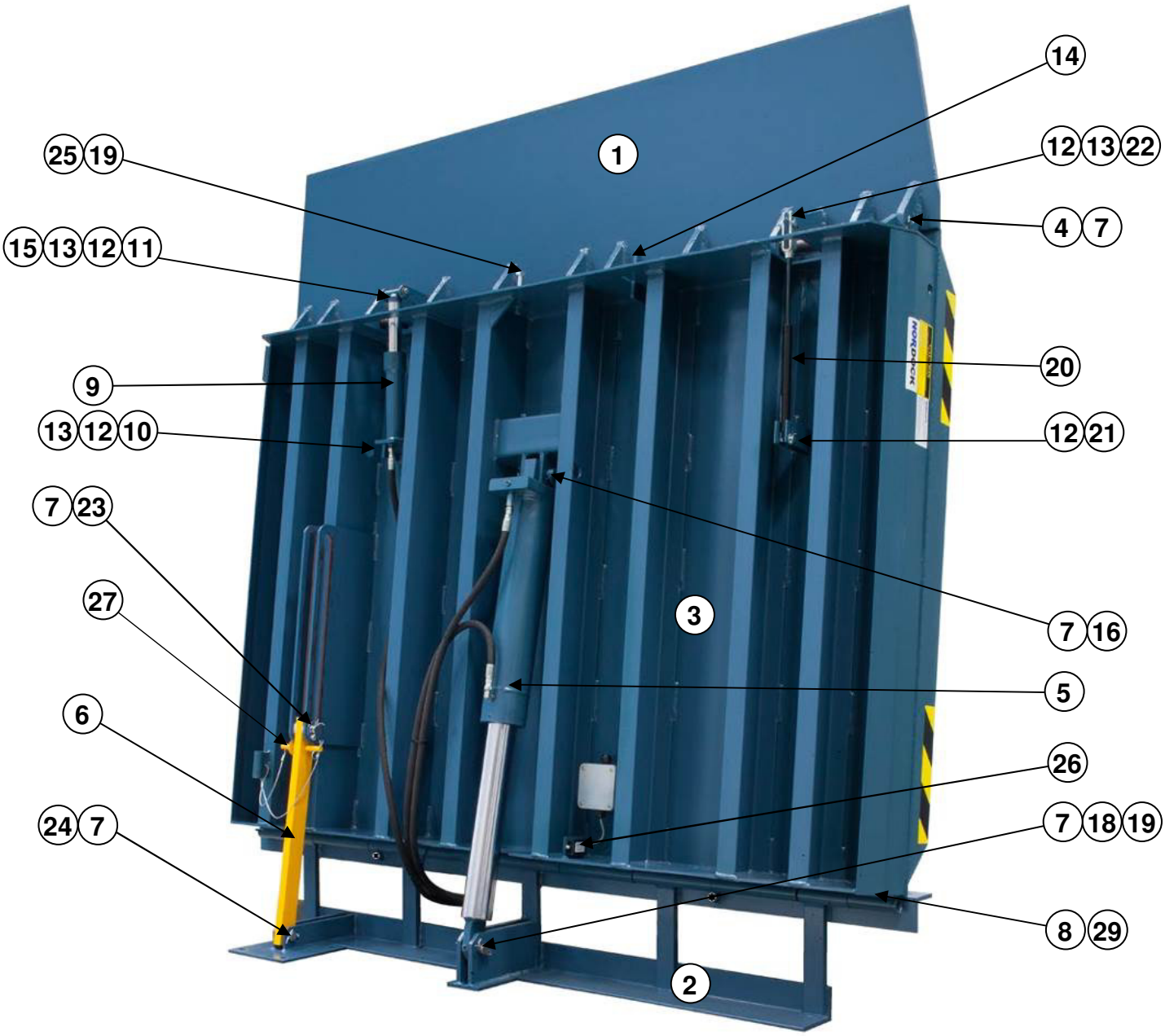

Item	Qty.	Description / Model	P/N	Note
1	1	Lip Weldment	42-0331	
2	1	Frame Weldment	50145-FA	
3	1	Deck Weldment	51799-DA	
4	1	Lip Hinge Rod 6’ wide deck 6.5’ wide deck 7” wide deck	 43-0148 43-0149 43-0150	
5	1	Deck Cylinder (w/ spherical bearing and bushings)	33850-CYL	
6	1	Maintenance Support Arm	C/F	
7	9	Cotter pin, ¼” x 1-3/4”	13-0992	

8	1	Rear Hinge Rod (stainless steel) 6’ wide deck 6.5’ Wide deck 7’ wide deck	 43-1060 C/F 43-1371	
9	1	Cylinder, Lip	C1-0009	N/S
10	1	Clevis Pin, ½” x 4-1/2	13-3672	N/S
11	1	Clevis Pin, ½” x 3-1/2”	13-0399	N/S
12	2	Cotter Pin, 1/8” x 1”	13-0171	
13	4	Washer, Flat, 1/2", STD, ZP	13-0267	
14	1	Lip Safety Lock Lug	43-0252	N/S
15	1	Lip Cam Weldment, 25-50K	42-0821	
16	1	Pin, Main Cylinder Base	43-2515	N/S
17	1	Bearing, 1” Spherical	13-0248	
18	1	Pin, Main Cylinder Ram	43-2516	
19	1	Lip Stop Bolt, 5/8” x 4”	13-0302	
20	1	Gas Spring	42-1568	
21	1	Clevis Pin, 3/8” Dia. x 1-5/8”	13-0500	
22	1	Clevis Pin, ½” Dia. x 2”	13-0398	
23	1	Guide Pin, Maintenance Strut	43-0174	
24	1	Clevis Pin, 1” Dia. x 2-1/2”	13-0222	
25	1	Nut, 5/8”-11	13-0289	
26	1	Position Sensor	13-3299	
27	1	Locking Pin, Maintenance Strut	42-3901	
28	1	Drop Curtain (not shown)	51027-DC	
29	2	Spring-pin	13-0555	
N/S	8	Frame Anchors, 5/8” x 5” Lg. Wedge Type	13-0779	
N/S	2	Bumper	61-0069	
N/S	2	Bumper Risers	50454-BR	
N/S	2	Lip keeper	16377-LK	

N/S – Not Shown
N/A – Not Applicable

Hydraulics

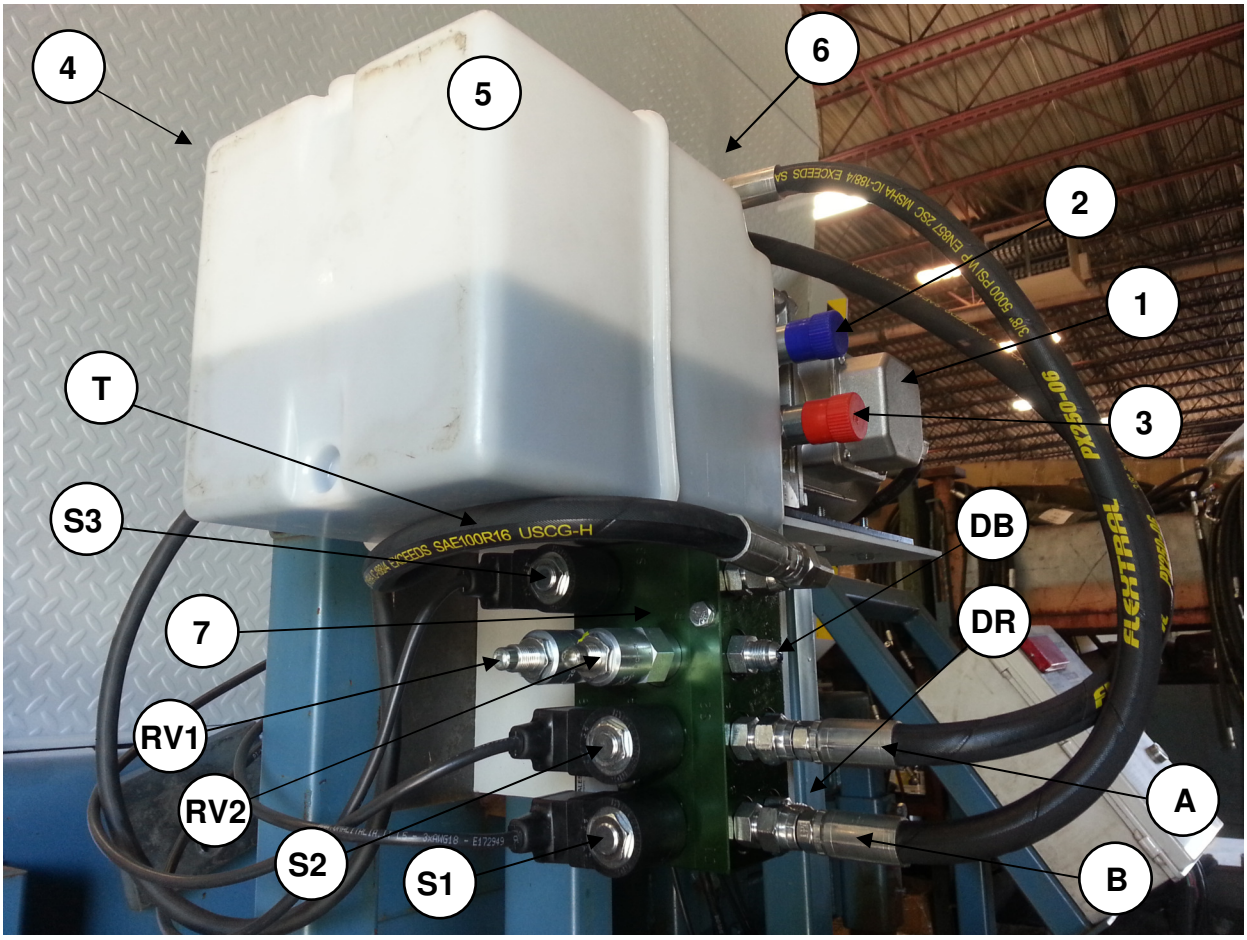

Item	Qty.	Description / Model	P/N	Note
	1	Complete Hydraulic Power Unit (Items 1-6) 110/220/1/60 208/230/460/3/60 575/3/60	 13-4011 13-0791 13-0792	
1	1	Motor		
2	1	Sequence Valve Pressure Adjustment (blue cap)		
3	1	Main Pressure Relief Valve (red cap)		
4	1	Flow Control - Lowering speed in service range only		
5	1	Reservoir		
6	1	Filler Breather		
7	1	Dock Manifold, 120 VAC Coils Coil only	47-0018 13-0595	
A		“A” Line		
B		“B” Line		
T		“T” Line		
DB		“DB” Line - Deck Cylinder Base		
DR		“DR” Line - Deck Cylinder Rod		
L		“L” Line - Lip Cylinder		
RV1		“RV1” - Relief Valve 1- Holds dock when above service range		
RV2		“RV2” - Relief Valve 2 - Overload relief		
S1		“S1” - Solenoid Valve 1, N/C - see hydraulic schematic		
S2		“S2” - Solenoid Valve 2, N/O - see hydraulic schematic		
S3		“S3” - Solenoid Valve 3, N/C - see hydraulic schematic		

NORDOCK®



CONSTRUCTOR™ AIRDOCK® Series
Air-Powered Dock Leveler
Model (CA)
25,000 to 45,000 lbs. Capacity

Parts Manual

This manual applies to dock levelers manufactured on or after
April 2020 with Serial Numbers 49439 and greater.

P/N: 49-0229-B

NORDOCK INC.
Website: nordockinc.com ~ Email: sales@nordockinc.com ~ Toll free: 866-885-4276
Nordock Inc. reserves the right to make changes to specifications without notice or obligation. Nordock products are covered by U.S. Patents: 8,132,280; 7,603,733; D579,754; 7,384,229; 7,162,762; 7,013,519; 6,912,750; 6,834,409 and U.S. and foreign pending applications.

Parts and Service Tables

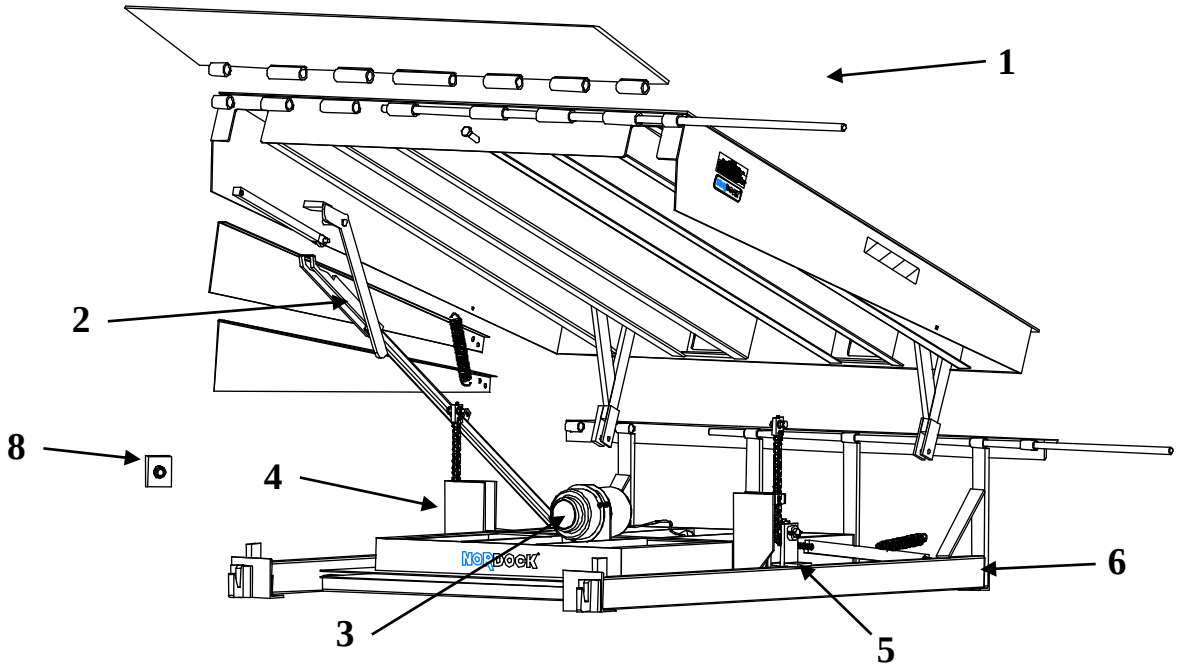

Item Number/ Section	Description
1	Deck and Lip Assembly
2	Lip Extend Assembly
3	Air Blower Motor Assembly
4	Air Pan Assembly
5	Lifting Assembly
6	Frame Assembly
7	Optional Equipment
8	Control Panels

Note: Not all parts and weldments are noted in this manual. Only those that are serviceable and/or replaceable are listed. For additional information on those parts not included in this manual, please contact Nordock Inc. Remember to make note of the model and serial number of the unit for accurate parts and service.

Section 1 – Deck and Lip Assembly

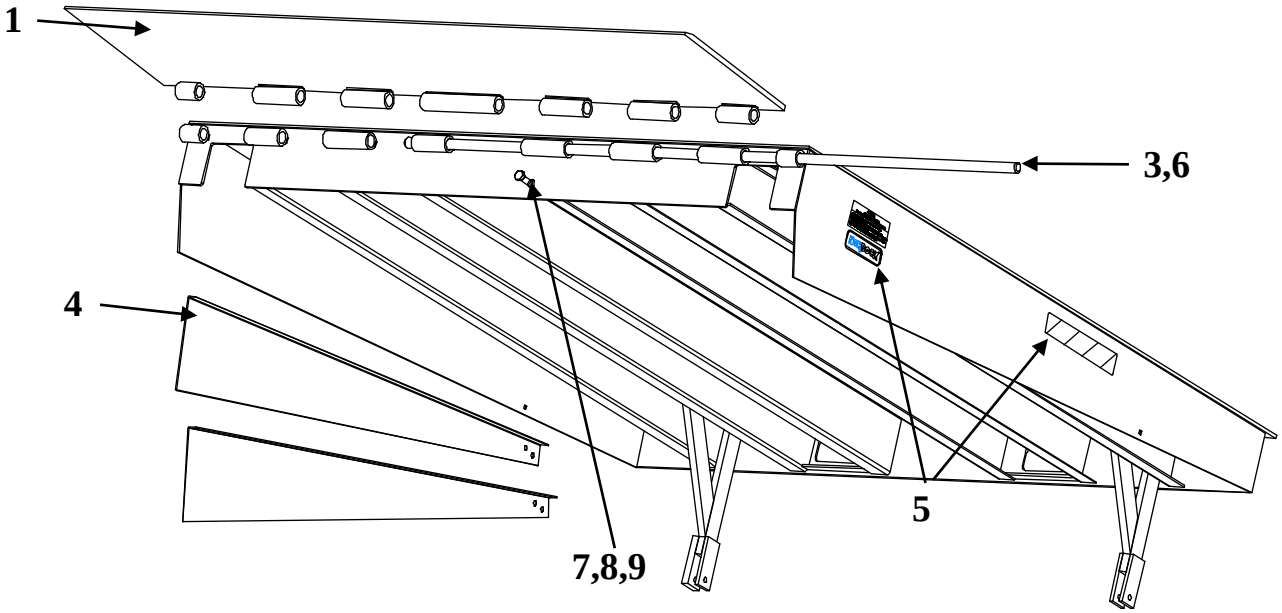

Item	Qty.	Description / Model				P/N	Note
1	1	Lip Weldment	25-30K	6’	16”	42-2339	
					18”	42-2340	
					20”	42-2341	
				7’	16”	42-2357	
					18”	42-2358	
					20”	42-2359	
				7’T	16”	42-2342	
					18”	42-2343	
					20”	42-2356	
			35K	6’	16”	42-2344	
					18”	42-2345	
					20”	42-2346	
				7’	16”	42-2347	
					18”	42-2348	
					20”	42-2349	
				7’T	16”	42-2360	
					18”	42-2361	
					20”	42-2362	
			40-45K	6’	16”	42-2350	
					18”	42-2351	
					20”	42-2352	
				7’	16”	42-2353	
					18”	42-2354	
					20”	42-2355	
				7’T	16”	42-2363	
					18”	42-2364	
					20”	42-2365	
2	1	Lip Safety Lock Lug (optional; not shown)				43-0252	
3	1	Hinge Rod	6’ Wide Docks			43-0148	
			7’ Wide Docks			43-0150	
4	1	Telescoping Side Skirt Kit – 6’				42-0393	
	1	Telescoping Side Skirt Kit – 8’				42-0394	

5	1	Dock Leveler Decal Kit	42-0392	1
6	2	Spring Pin	13-0555	
7	1	Nut	13-0289	
8	1	Lip Stop Bolt	13-0302	
9	1	Lock Washer	13-0657	

1 – For correct decal placement, see safety section.

Section 2 – Lip Extend Assembly

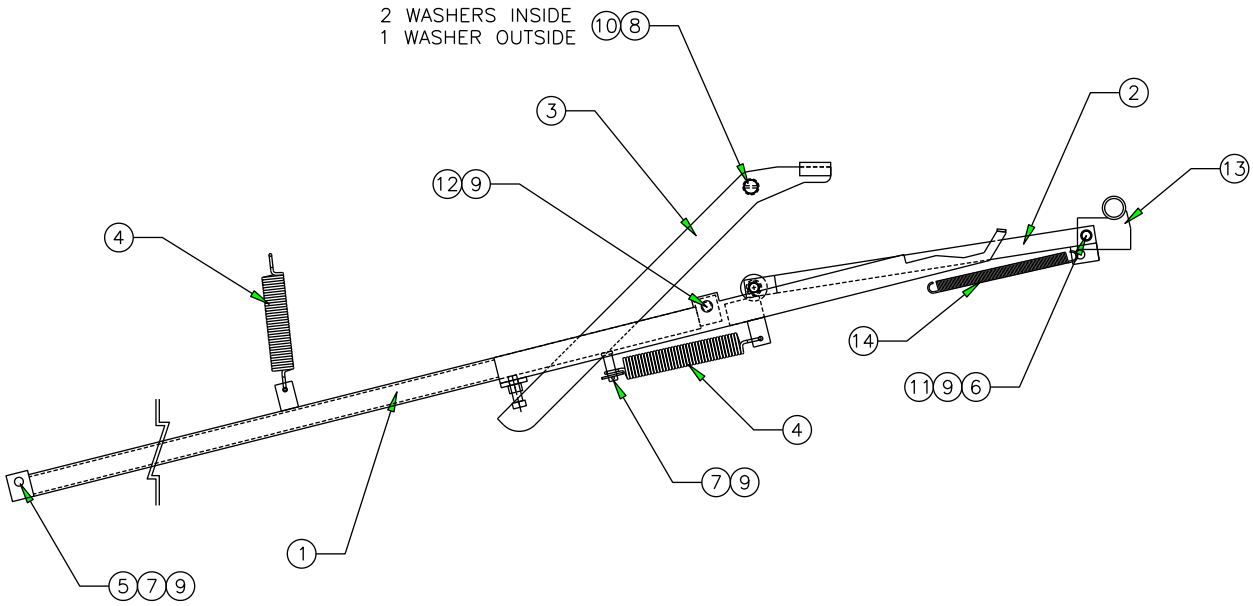

Item	Qty	Description / Model		P/N	Note
1	1	Rear Push-bar	6', 19"F 8', 19"F	42-2217 42-2219	
2	1	Front Push-bar Assembly		42-2410	
3	1	Kick-out Lever		42-2182	
4	2	Spring		13-1955	
5	1	Clevis Pin – ½" x 2-1/2", Plated		13-1099	
6	1	Clevis Pin – ½" x 2"		13-0398	
7	2	Flat Washer, 1/2", Plated		13-0267	
8	3	Flat Washer, 3/4", Plated		13-0649	
9	4	Cotter Pin, 1/8" x 1" LG		13-0171	
10	1	Cotter Pin, 1/8" x 1-1/2" LG		13-0397	
11	1	Sleeve Bushing (included with Item 2)		13-0434	
12	1	Clevis pin, ½" x 2-1/4", Plated		13-0288	
13	1	Lip Cam	25-30K 35-45K	42-2417 42-2411	
14	1	Spring, 5/8" OD x 8" long		13-0294	
		Complete assembly (includes items 1-12)	6', 19"F 8', 19"F	42-3826 42-3827	

Section 3 – Air Blower Motor Assembly

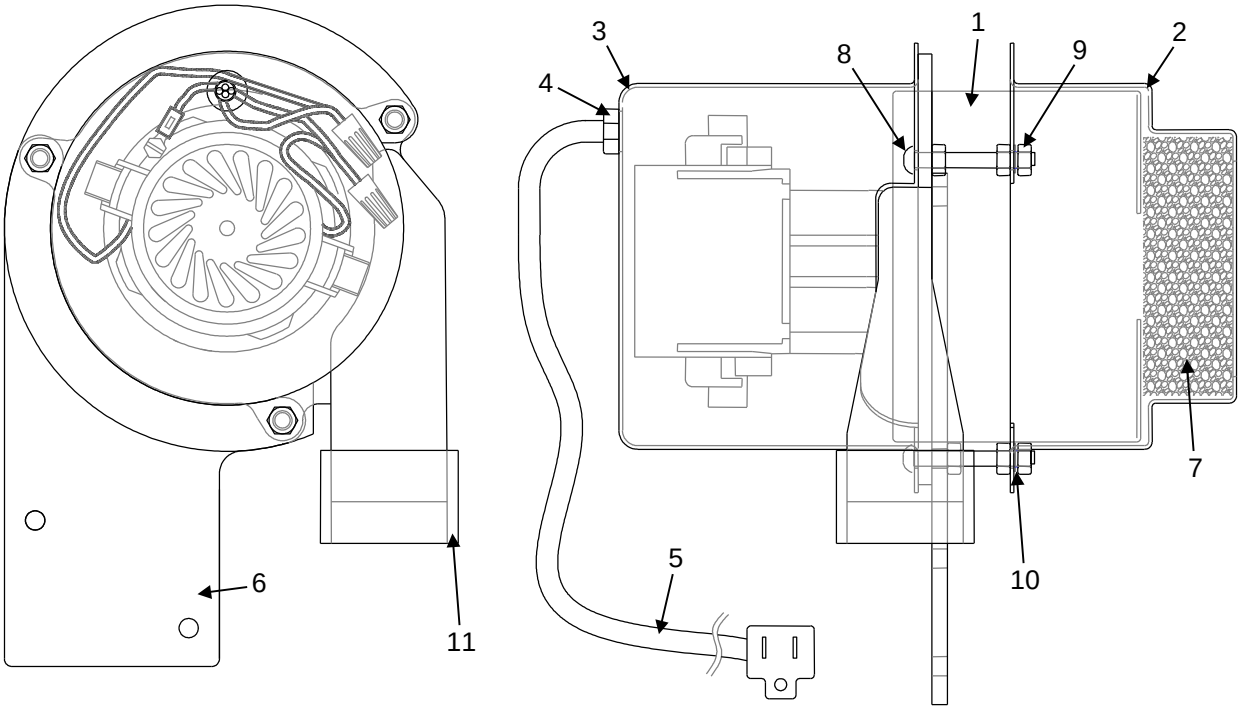

Item	Qty.	Description	P/N	Note
1	1	Blower Motor	13-1847	
2	1	Blower Cover	43-0896	
3	1	Motor Cover	43-0894	
4	1	Strain Relief Grommet	13-1739	
5	1	Power Cord	13-1738	
6	1	Motor Mount Flange	43-0908	
7	1	Intake Filter	43-0923	
8	3	Screw, ¼" – 20 x 2" Long, Button Head, Plated	13-2018	
9	9	Nut, ¼" – 20, Plated	13-0334	
10	3	Lock Washer, ¼", Plated	13-0335	
11	1	ABS Pipe Coupler	13-1796	
		Full Assembly (includes items 1-11)	42-1429	

Section 4 – Air Pan Assembly

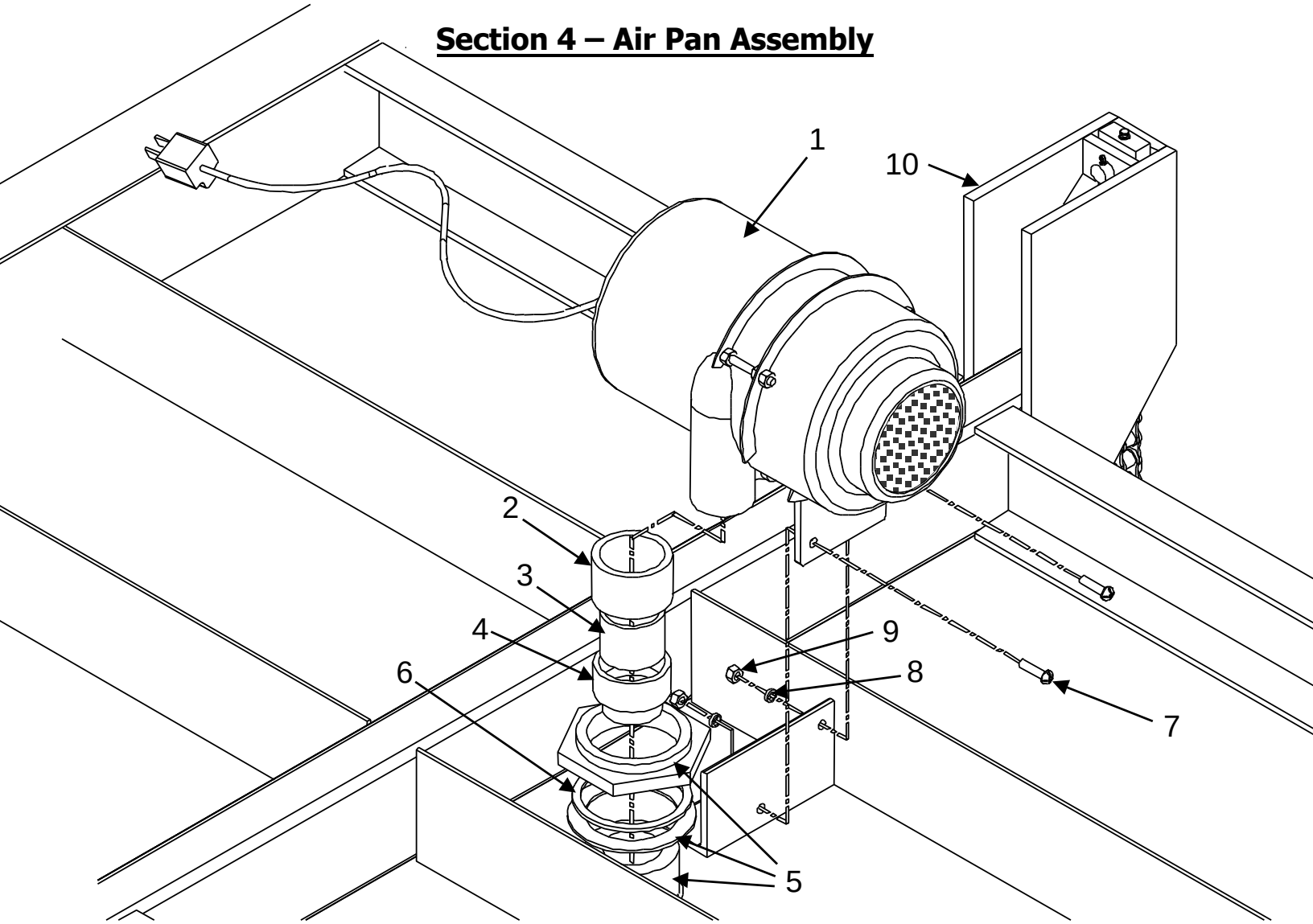

Item	Qty.	Description		P/N	Note
1	1	Complete Blower Motor Assembly		42-1429	
2	1	ABS Pipe Coupler, Ø1-1/2”		13-1796	
3	1	ABS Pipe, Ø1-1/2”		43-0978	
4	1	ABS Adapter, 1-1/2” MNPT x 1-1/2” Female Pipe		13-1797	
5	1	ABS Tank Fitting, 1-1/2” (c/w nut and washer; include with airbag)		13-1775	*
6	1	Spacer Washer		13-1965	
7	2	Bolt, ¼” – 20, 1” Long, Plated		13-0623	
8	2	Lock Washer, ¼”, Plated		13-0335	
9	2	Nut, ¼” – 20, Plated		13-0334	
10	1	Top Pan Weldment	6’ Dock 8’ Dock	42-2237 42-2238	
11	N/S	Tank Fitting Wrench	Optional	42-2173	

* ABS Tank fitting (item 5) is included with the Airbag (shown in lifting assembly)
* Left hand thread
* Optional tool (item 11) is available to order to ease tightening tank fitting

Section 5 – Lifting Assembly

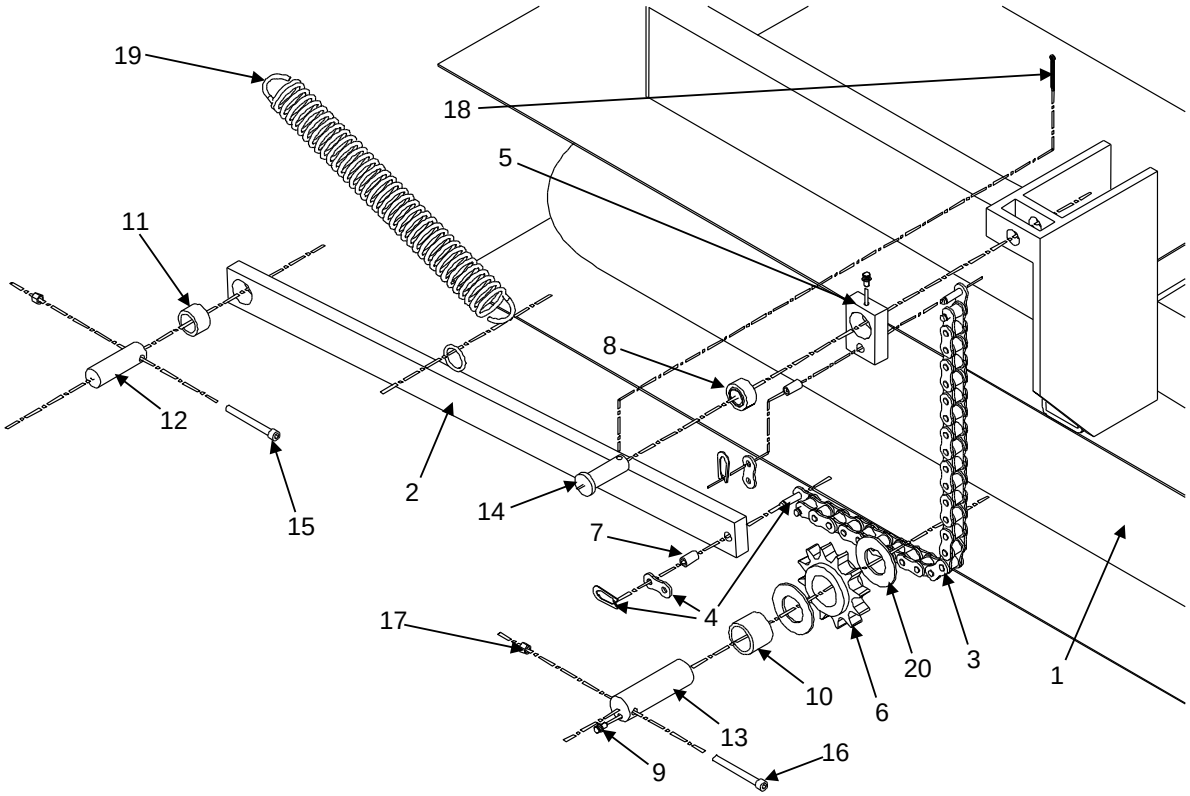

Item	Qty	Description / Model		P/N
1	1	Airbag (includes tank fitting and fasteners)	6' Dock 8' Dock	42-3839 42-3838
2	2	Lower Chain Pull-bar Assembly (includes 7 & 11)	6' Dock 8' Dock	42-2162 42-2151
3	2	Chain	6' Dock 8' Dock	43-0986 43-0987
4	4	Chain Master Link	6' & 8' Dock	13-1741-1
5	2	Upper Chain Pull-bar	6' Dock 8' Dock	43-0866 43-0866
6	2	Sprocket (α - also requires 2 spacers, 43-1064)	6' Dock 8' Dock (25-40K) 8' Dock (45-50K)	43-0882 43-0882 43-0985
7	4	Chain Bushing		43-1100
8	2	Spherical Bearing		13-1848
9	4	Grease Fitting		13-0655
10	2	Sprocket Bearing (13-2103 also includes bearing race 13-2104)	6' Dock 8' Dock (25-40K) 8' Dock (45-50K)	13-1795 13-1795 13-2103
11	2	Lower Pull-bar Bushing	6' & 8' Dock	13-1770
12	2	Lower Pull-bar Pin Assembly (c/w weld-on collar)	6' & 8' Dock	42-2168
13	2	Sprocket Pin Assembly (c/w weld-on collar and grease fitting)	6' & 8' Dock	42-2018
14	2	Clevis Pin		13-0958
15	2	Socket Head Cap Screw, ¼" – 20, 1-1/2" Long		13-1528
16	2	Socket Head Cap Screw, ¼" – 20, " 2" Long		13-1850
17	4	Nut, Nylon Locking		13-0270
18	2	Cotter Pin		13-0171
19	2	Tension Spring		13-1955
20	4	Bearing Race Spacer	6' & 8' Dock	43-1064

Section 6 – Frame Assembly

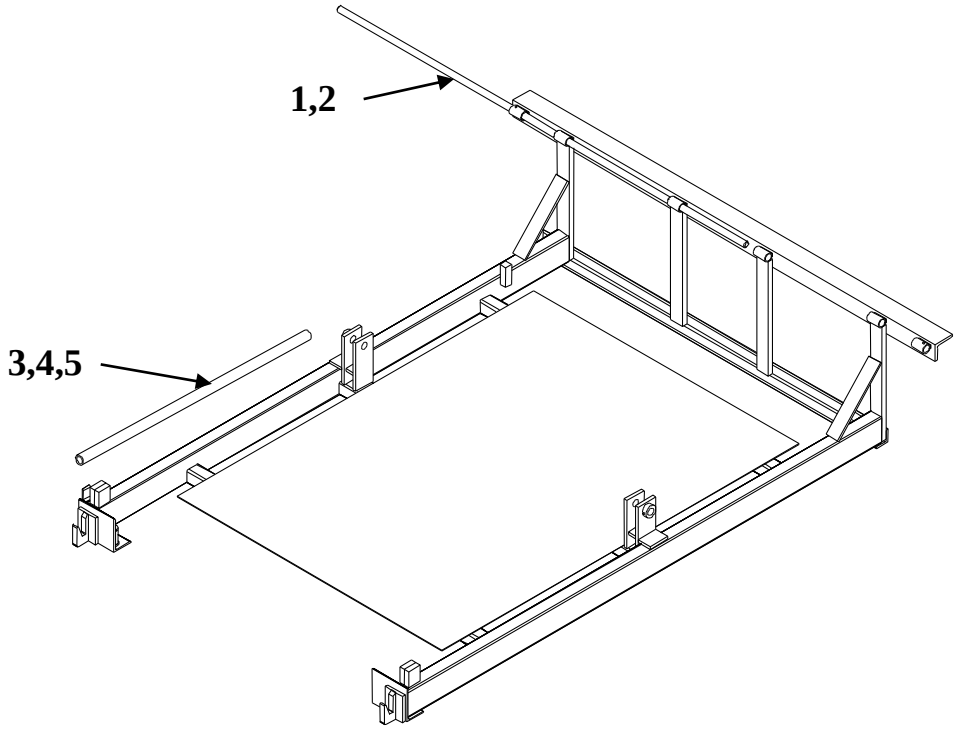

Item	Qty.	Description		P/N 19" Frame	Note
1	1	Hinge Rod	6' Wide Docks 7' Wide Docks	43-0154 43-0156	
2	2	Spring Pin		13-0555	
3	1	Maintenance / Support Stand	Standard Dock (40")	43-0262	
4	1	Fender washer, ¼"		13-0271	
5	1	Tek-screw, ¼"-14 x 1"		13-0273	

Section 7 – Optional Equipment

Option	Qty.	Description	P/N	Note
Bumpers	2	Standard Bumpers	61-0001	1
Weather Seals	6' 8'	Brush Seal and Mounting Extrusion Kit Brush Seal and Mounting Extrusion Kit	61-0025 61-0024	
Photo Eye		Photo Eye, Diffuse Reflection 5 m (16') Cable Bracket	13-2435 13-2436 13-2437	

1 – For custom bumper sizes and applications, please contact your nearest Nordock representative or call 1-866-885-4276.

Section 8 – Control Panels

Volts Phase	Description	P/N	Note
115/1/60	Standard Panel / Single Pushbutton (NEMA 4)	13-1791	
115/1/60	Single Pushbutton (NEMA 4) with Hinged Lockable Cover	13-2200	
115/1/60	Optional Panel / Single Pushbutton, Interlock (NEMA 4)	48-0065	
115/1/60	Optional Panel / Single Pushbutton, Photo-eye Interlock (NEMA 4)	48-0080	

NORDOCK®

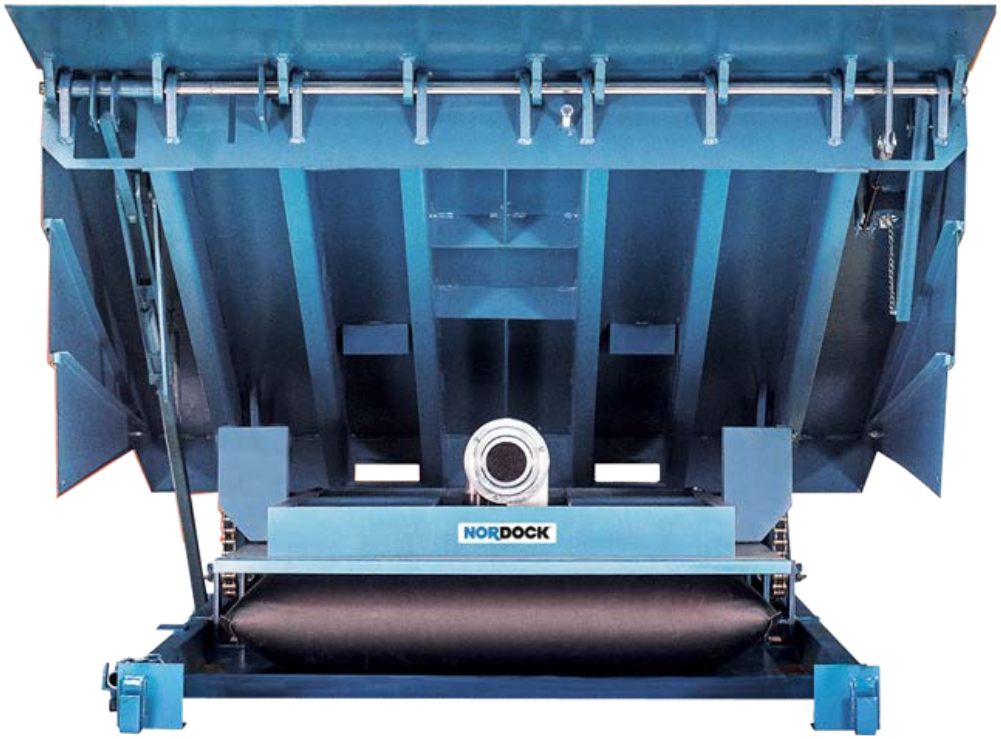

AIRDOCK® Series
Air-Powered Dock Leveler
Model (AD)

25,000 to 50,000 lbs. Capacity

Parts Manual

This manual applies to dock levelers manufactured on or after
May 2021 with Serial Numbers 55566 and greater

P/N: 49-0245-E

NORDOCK INC.
Website: nordockinc.com ~ Email: sales@nordockinc.com ~ Toll free: 866-885-4276
Nordock Inc. reserves the right to make changes to specifications without notice or obligation. Nordock products are covered by U.S. Patents: 8,132,280; 7,603,733; D579,754; 7,384,229; 7,162,762; 7,013,519; 6,912,750; 6,834,409 and U.S. and foreign pending applications.

Parts and Service Tables

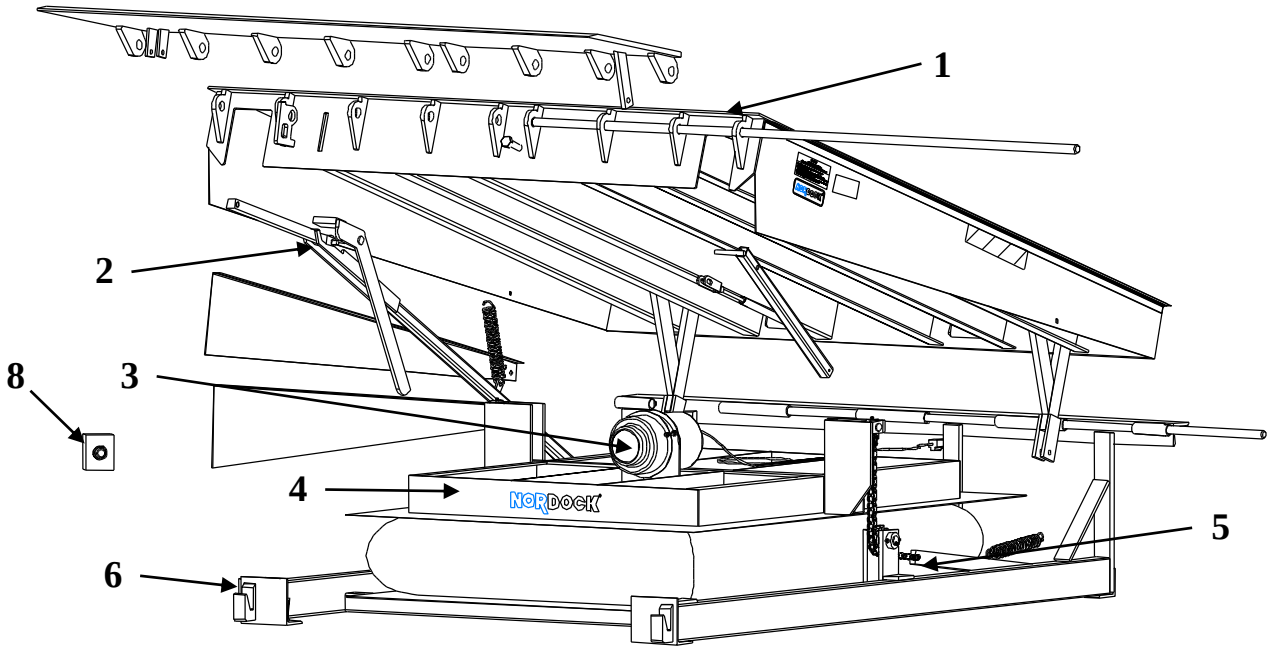

Item Number/ Section	Description
1	Deck and Lip Assembly
2	Lip Extend Assembly
3	Air Blower Motor Assembly
4	Air Pan Assembly
5	Lifting Assembly
6	Frame Assembly
7	Optional Equipment
8	Control Panels

Note: Not all parts and weldments are noted in this manual. Only those that are serviceable and/or replaceable are listed. For additional information on those parts not included in this manual, please contact Nordock Inc. Remember to make note of the model and serial number of the unit for accurate parts and service.

Section 1 – Deck and Lip Assembly

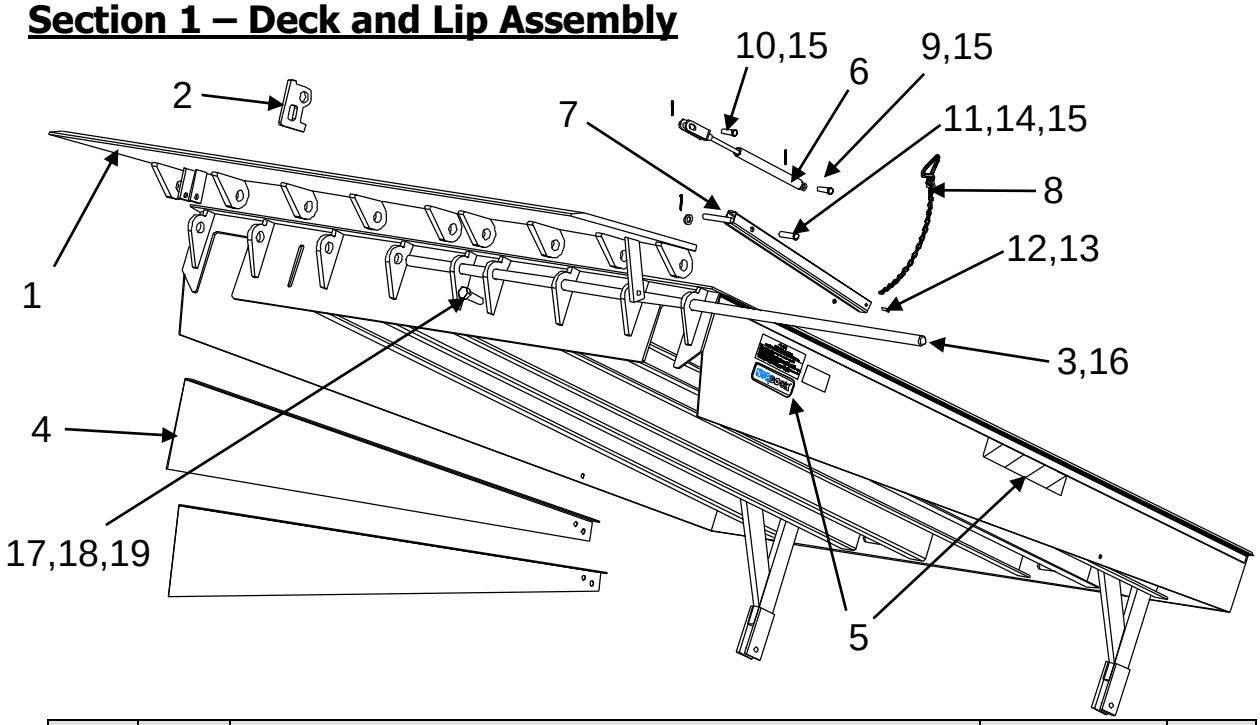

Item	Qty.	Description / Model				P/N	Note
1	1	Lip Weldment	25K	70”	16”	42-0807	
					18”	42-0810	
					20”	42-0813	
				6’	16”	42-0300	
					18”	42-0301	
					20”	42-0302	
				6.5’	16”	42-0308	
					18”	42-0309	
					20”	42-0310	
				7’	16”	42-0317	
					18”	42-0318	
					20”	42-0319	
				7’T	16”	42-0323	
					18”	42-0324	
					20”	42-0325	
			30-40K	70”	16”	42-0808	
					18”	42-0811	
					20”	42-0814	
				6	16”	42-0303	
					18”	42-0009	
					20”	42-0304	
				6.5’	16”	42-0311	
					18”	42-0312	
					20”	42-0313	
				7’	16”	42-0020	
					18”	42-0021	
					20”	42-0022	
				7’T	16”	42-0326	
					18”	42-0327	
					20”	42-0328	

Item	Qty.	Description / Model				P/N	Note
1	1	Lip Weldment	45-50K	70”	16”	42-0809	
					18”	42-0812	
					20”	42-0815	
				6’	16”	42-0305	
					18”	42-0306	
					20”	42-0307	
				6.5’	16”	42-0314	
					18”	42-0315	
					20”	42-0316	
				7’	16”	42-0320	
					18”	42-0321	
					20”	42-0322	
				7’T	16”	42-0329	
					18”	42-0330	
					20”	42-0331	
2	1	Lip Safety Lock Lug				43-0252	
3	1	Hinge Rod		70” Wide Docks		43-0465	
				6’ Wide Docks		43-0148	
				6.5” Wide Docks		43-0149	
				7’ Wide Docks		43-0150	
4	1	Telescoping Side Skirt Kit – 6’				42-0393	
	1	Telescoping Side Skirt Kit – 8’				42-0394	
	1	Telescoping Side Skirt Kit – 10’				42-0395	
5	1	Dock Leveler Decal Kit				42-0392	1
6	1	Complete assembly (Gas spring with clevis installed)				42-1568	
7	1	Below Dock Control Lever				42-2016	
8	1	Below Dock Control Pull Chain				42-1415	
9	1	Clevis Pin, Gas Spring Base, 3/8” x 1-5/8”				13-0500	
10	1	Clevis Pin, Gas Spring Clevis, 1/2” x 2”				13-0398	
11	1	Clevis Pin, Lever Pivot, 1/2” x 2-1/4”				13-0288	
12	1	Screw, 10-24 x 3/4”				13-0787	
13	1	Nut, Nylock, 10-24				13-0582	
14	1	Washer, 1/2”				13-0267	
15	3	Cotter Pin, 1/8” x 1”				13-0171	
16	2	Cotter Pin, 1/4” x 1-3/4”				13-0992	
17	1	Lip Stop Bolt				13-0302	
18	1	Nut				13-0289	
19	1	Lock Washer				13-0657	

1 – For correct decal placement, see safety section.

Section 2 – Lip Extend Assembly

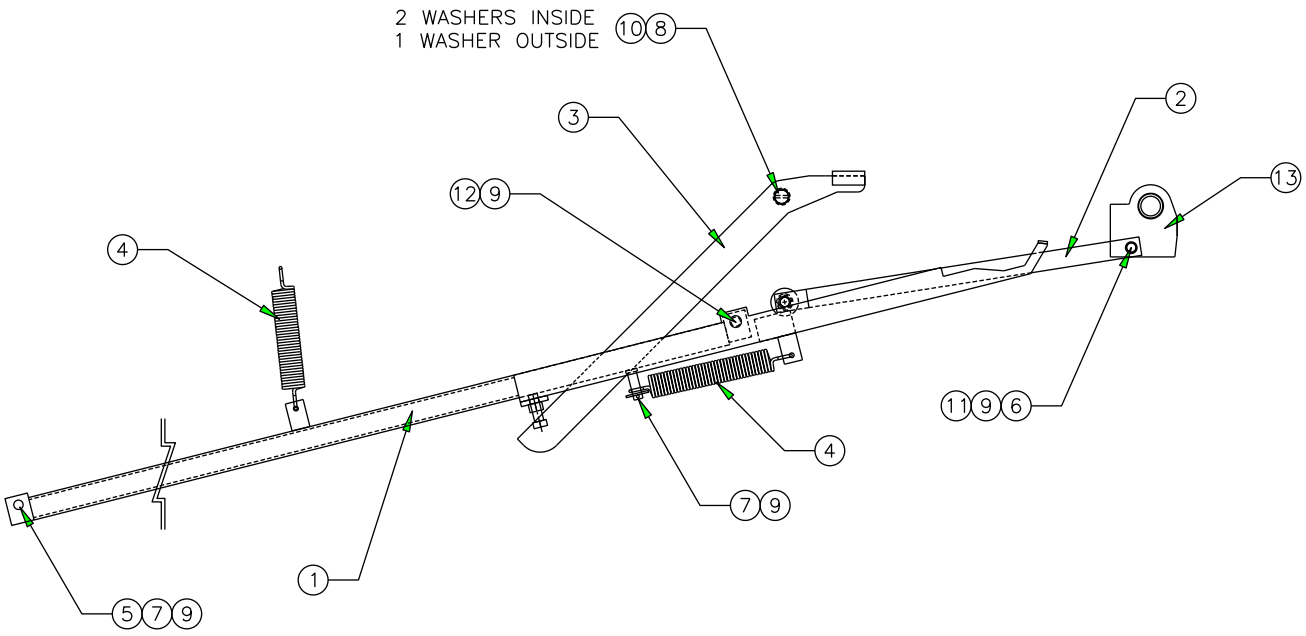

Item	Qty	Description / Model		P/N	Note
1	1	Rear Push-bar	6’ Long Dock, 19” Frame 6’ Long Dock, 23” Frame 8’ Long Dock, 19” Frame 8’ Long Dock, 23” Frame 10’ Long Dock, 19” Frame 10’ Long Dock, 23” Frame	42-2245 42-2218 42-2219 42-2220 42-3859 42-2222	
2	1	Front Push-bar Assembly		42-2181	
3	1	Kick-out Lever		42-2182	
4	2	Spring		13-1955	
5	1	Clevis Pin – ½” x 2-1/2”, Plated		13-1099	
6	1	Clevis Pin – ½” x 2”		13-0398	
7	2	Flat Washer, 1/2”, Plated		13-0267	
8	3	Flat Washer, 3/4”, Plated		13-0649	
9	4	Cotter Pin, 1/8” x 1” LG		13-0171	
10	1	Cotter Pin, 1/8” x 1-1/2” LG		13-0397	
11	1	Sleeve Bushing (included with Item 2)		13-0434	
12	1	Clevis pin, ½” x 2-1/4”, Plated		13-0288	
13	1	Lip Cam (Pick Separately)		42-3824	
		Assembly (includes items 1-12; lip cam selected separately)	6’ Long Dock, 19” Frame 6’ Long Dock, 23” Frame 8’ Long Dock, 19” Frame 8’ Long Dock, 23” Frame 10’ Long Dock, 19” Frame 10’ Long Dock, 23” Frame	42-3882 42-2248 42-2429 42-2252 42-3863 42-2254	

Section 3 – Air Blower Motor Assembly

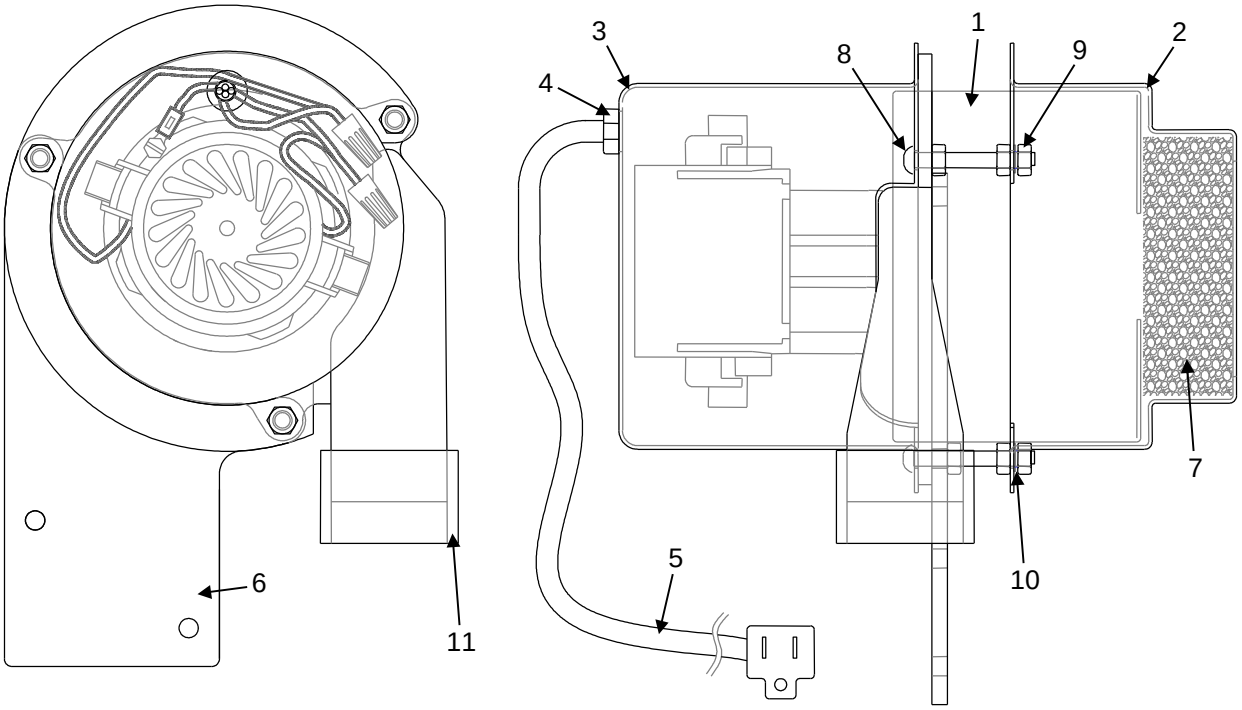

Item	Qty.	Description	P/N	Note
1	1	Blower Motor	13-1847	
2	1	Blower Cover	43-0896	
3	1	Motor Cover	43-0894	
4	1	Strain Relief Grommet	13-1739	
5	1	Power Cord	13-1738	
6	1	Motor Mount Flange	43-0908	
7	1	Intake Filter	43-0923	
8	3	Screw, ¼” – 20 x 2” Long, Button Head, Plated	13-2018	
9	9	Nut, ¼” – 20, Plated	13-0334	
10	3	Lock Washer, ¼”, Plated	13-0335	
11	1	ABS Pipe Coupler	13-1796	
		Full Assembly (includes items 1-11)	42-1429	

Section 4 – Air Pan Assembly

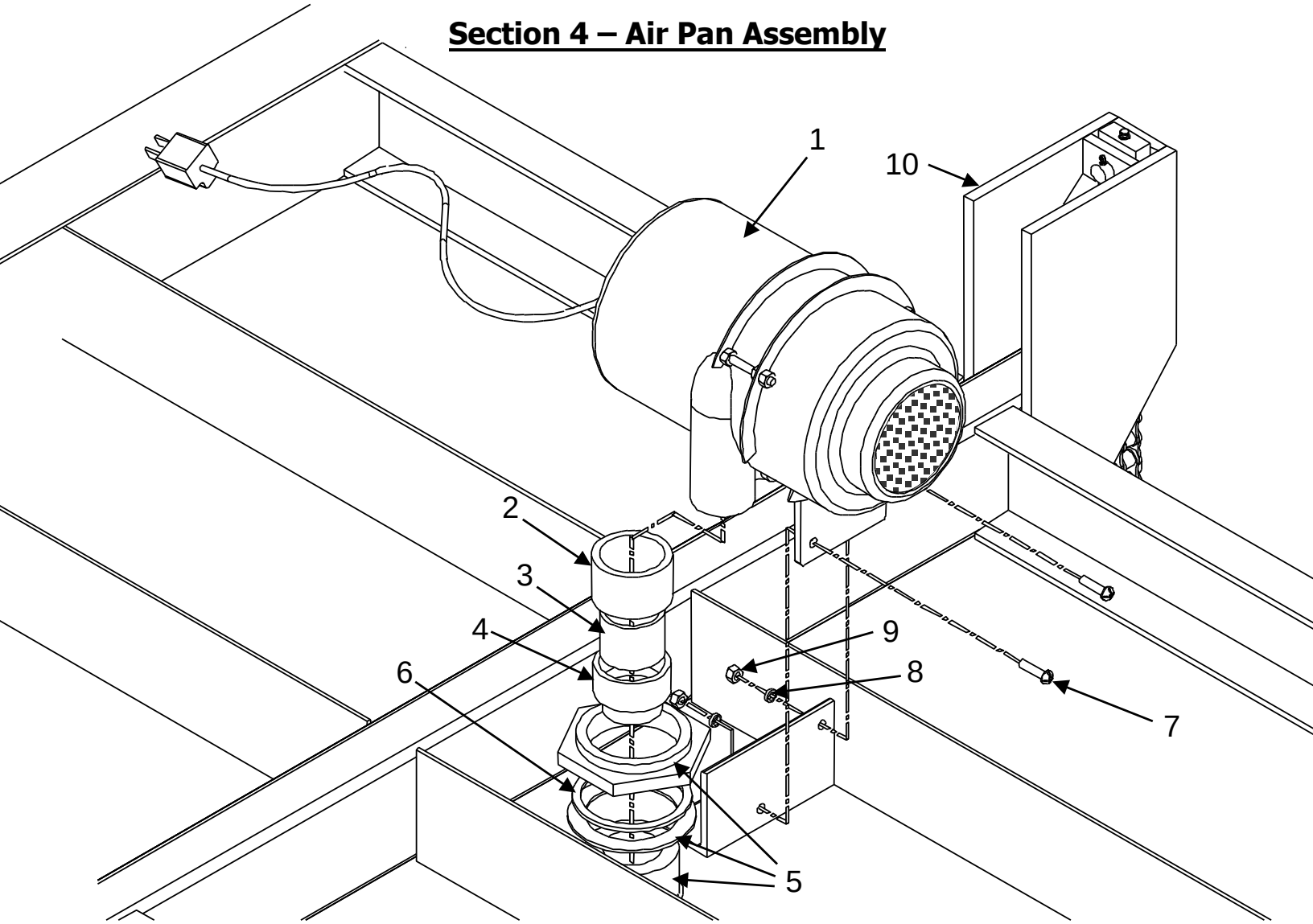

Item	Qty.	Description		P/N	Note
1	1	Complete Blower Motor Assembly		42-1429	
2	1	ABS Pipe Coupler, Ø1-1/2”		13-1796	
3	1	ABS Pipe, Ø1-1/2”		43-0978	
4	1	ABS Adapter, 1-1/2” MNPT x 1-1/2” Female Pipe		13-1797	
5	1	ABS Tank Fitting, 1-1/2” (c/w nut and washer; include with airbag)		13-1775	*
6	1	Spacer Washer		13-1965	
7	2	Bolt, ¼” – 20, 1” Long, Plated		13-0623	
8	2	Lock Washer, ¼”, Plated		13-0335	
9	2	Nut, ¼” – 20, Plated		13-0334	
10	1	Top Pan Weldment	6’ Dock 8’ Dock 10’ Dock	42-2237 42-2238 42-2024	
11	N/S	Tank Fitting Wrench	Optional	42-2173	

* ABS Tank fitting (item 5) is included with the Airbag (shown in lifting assembly)
* Left hand thread
* Optional tool (item 11) is available to order to ease tightening tank fitting

Section 5 – Lifting Assembly

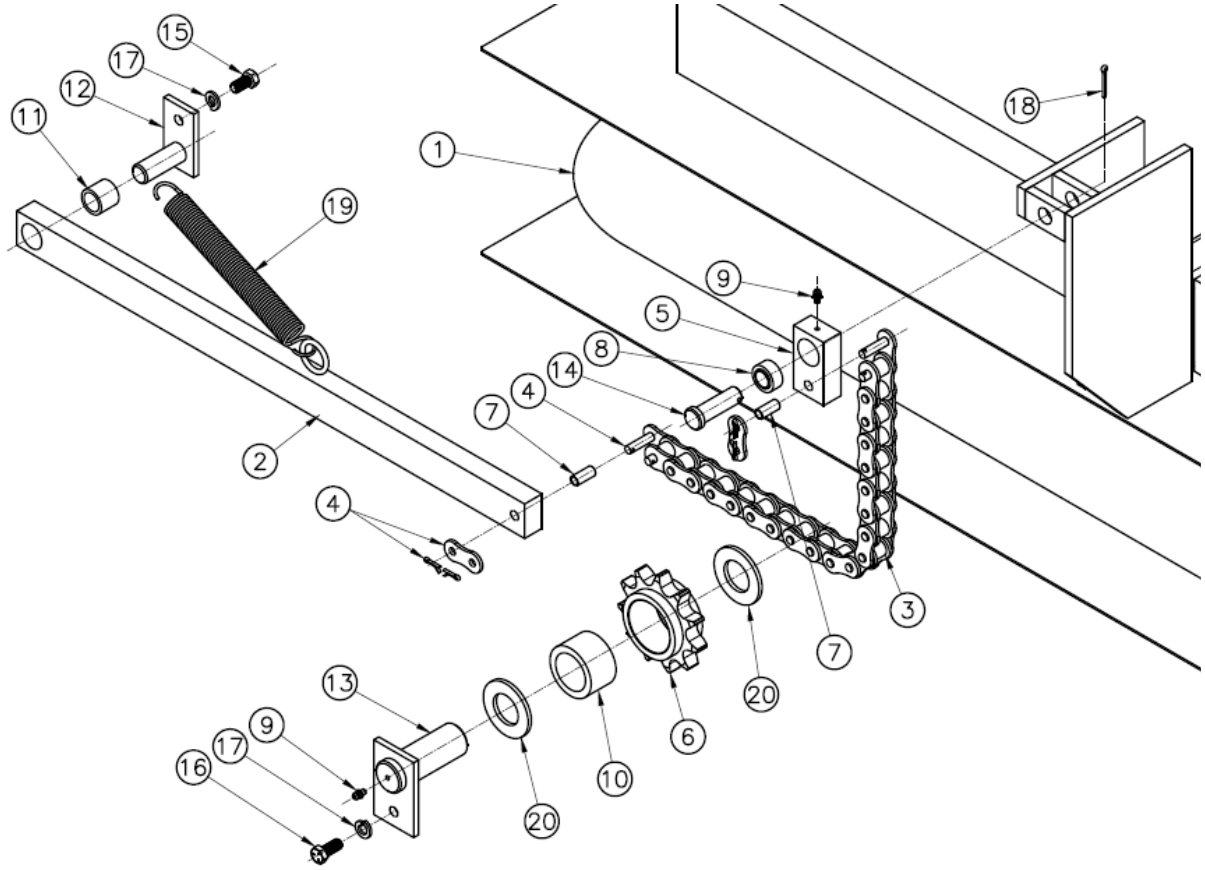

Item	Qty.	Description / Model		P/N
1	1	Airbag with anchor straps (includes tank fitting and fasteners)	6’ Dock 8’ Dock 10’ Dock	42-3839 42-3838 42-3840
2	2	Lower Chain Pull-bar Assembly (includes 7 & 11)	6’ Dock 8’ & 10’ Docks	42-2162 42-2155
3	2	Chain	6’ Dock 8’ Dock 10’ Dock	43-0986 43-1317 43-0988
4	4	Chain Master Link	6’ Dock 8’ & 10’ Docks	13-1741-1 13-1973-1
5	2	Upper Chain Pull-bar	6’ Dock 8’ & 10’ Docks	43-0866 43-0910
6	2	Sprocket	6’ Dock 8’ & 10’ Docks	43-0882 43-0990
7	4	Chain Bushing	6’ Dock 8’ & 10’ Docks	43-1100 43-0213
8	2	Spherical Bearing		13-1848
9	4	Grease Fitting		13-0655
10	2	Sprocket Bearing (13-2101 also requires bearing race 13-2102)	6’ Dock 8’ & 10’ Docks	13-1795 13-2101
11	2	Lower Pull-bar Bushing	6’ Dock 8’ & 10’ Docks	13-1770 13-1904
12	2	Lower Pull-bar Pin Assembly (c/w weld-on torque arm)		42-3005
13	2	Sprocket Pin Assembly (includes weld-on torque arm and grease fitting)	6’ Dock 8’ & 10’ Docks	42-3006 42-3004
14	2	Clevis Pin		13-0958
15	2	Hex Head Cap Screw, 3/8 – 16 NC x 3/4” Long		13-1632
16	2	Hex Head Cap Screw, 3/8 – 16 NC x 7/8” Long		13-6740
17	4	Lockwasher, 3/8” SAE, Gr. #5, Plated		13-0767
18	2	Cotter Pin		13-0171
19	2	Tension Spring		13-1955
20	4	SAE Flat Washer, 1”, Plated SAE Flat Washer, 1-1/4”, Plated	6’ Dock 8’ & 10’ Docks	13-1064 13-3700

Section 6 – Frame Assembly

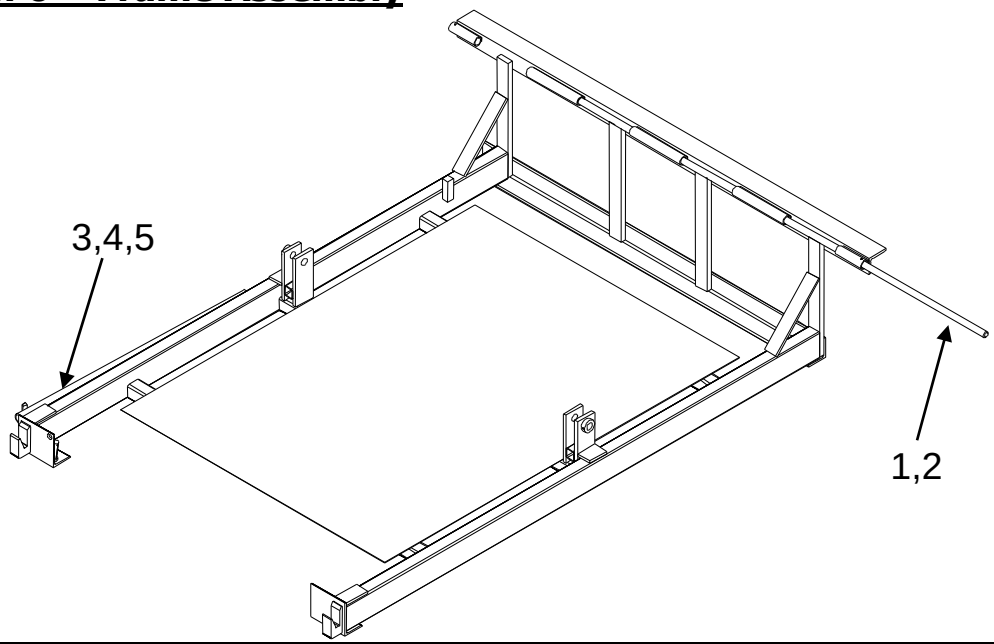

Item	Qty.	Description		P/N	Note
1	1	Hinge Rod	70” Wide Docks 6’ Wide Docks 6.5’ Wide Docks 7’ Wide Docks	43-0462 43-0154 43-0155 43-0156	
2	2	Spring Pin 1/4“ x 2”		13-0555	
3	1	Maintenance / Support Stand	Standard Dock (40”) Low Frame Dock (38 1/2”)	43-0262 43-0521	
4	1	Fender Washer, ¼”		13-0271	
5	1	Tek-screw, ¼”-14 x 1”		13-0273	

Section 7 – Optional Equipment

Option	Qty.	Description	P/N	Note
Bumpers	2	Standard Bumpers	61-0001	1
Weather Seals	6’ 8’ 10’	Brush Seal and Mounting Extrusion Kit Brush Seal and Mounting Extrusion Kit Brush Seal and Mounting Extrusion Kit	61-0025 61-0024 61-0037	
Photo Eye		Photo Eye, Diffuse Reflection 5 m (16’) Cable Bracket	13-2435 13-2436 13-2437	

1 – For custom bumper sizes and applications, please contact your nearest Nordock representative or call 1-866-885-4276.

Section 8 – Control Panels

Volts Phase	Description	P/N	Note
115/1/60	Standard Panel / Single Pushbutton (NEMA 4)	13-1791	
115/1/60	Single Pushbutton (NEMA 4) with Hinged Lockable Cover	13-2200	
115/1/60	Optional Panel / Single Pushbutton, Interlock (NEMA 4)	48-0065	
115/1/60	Optional Panel / Single Pushbutton, Photo eye Interlock (NEMA 4)	48-0080	

NORDOCK®

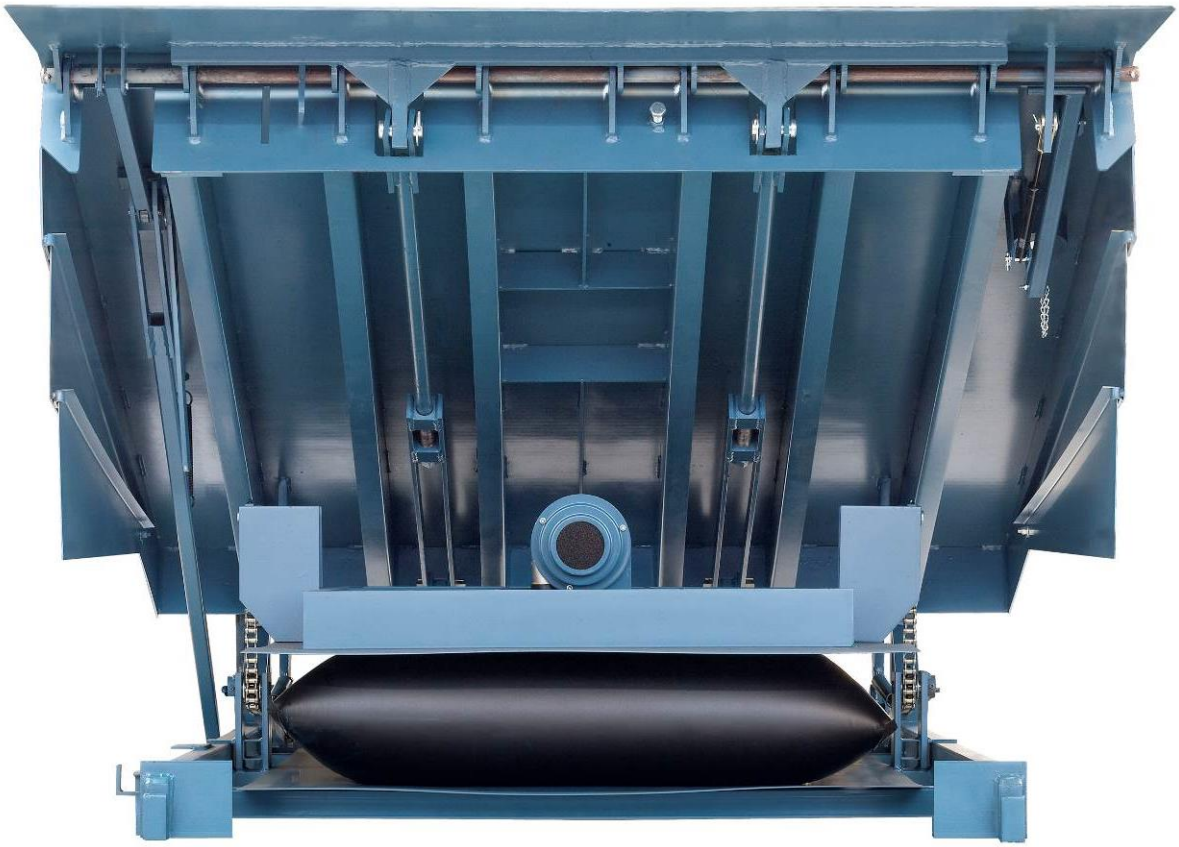

FLEX-LIP® Series
Air-Powered Dock Leveler
Model (ADF)
25,000 to 50,000 lbs. Capacity

Parts Manual

This manual applies to dock levelers manufactured on or after
April 2015 with Serial Numbers 31911 and greater.

P/N: 49-0243-B

NORDOCK INC.
Website: nordockinc.com ~ Email: sales@nordockinc.com ~ Toll free: 866-885-4276
Nordock Inc. reserves the right to make changes to specifications without notice or obligation. Nordock products are covered by U.S. Patents: 7,384,229; 7,162,762; 7,013,519; 6,912,750; 6,834,409 and U.S. and foreign pending applications.

Parts and Service Tables

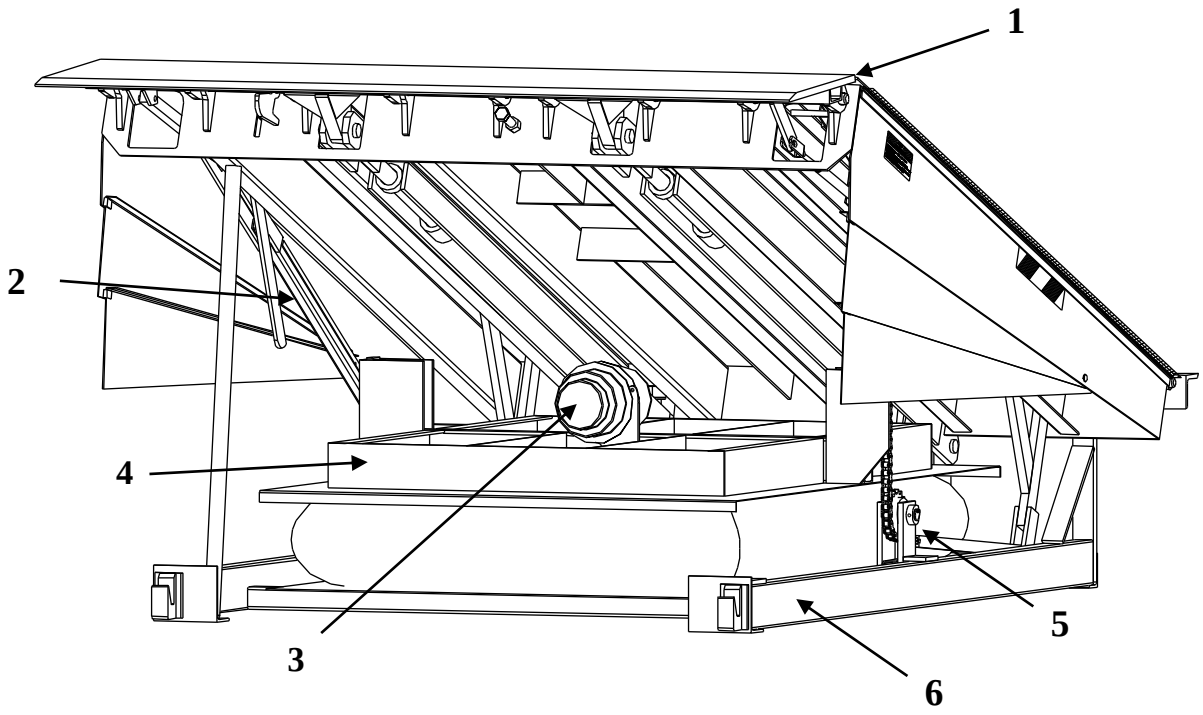

Item Number/ Section	Description
1	Deck and Lip Assembly
2	Lip Extend Assembly
3	Air Blower Motor Assembly
4	Air Pan Assembly
5	Lifting Assembly
6	Frame Assembly
7	Optional Equipment
8	Control Panels

Note: Not all parts and weldments are noted in this manual. Only those that are serviceable and/or replaceable are listed. For additional information on those parts not included in this manual, please contact Nordock Inc. Remember to make note of the model and serial number of the unit for accurate parts and service.

Section 1 – Deck and Lip Assembly

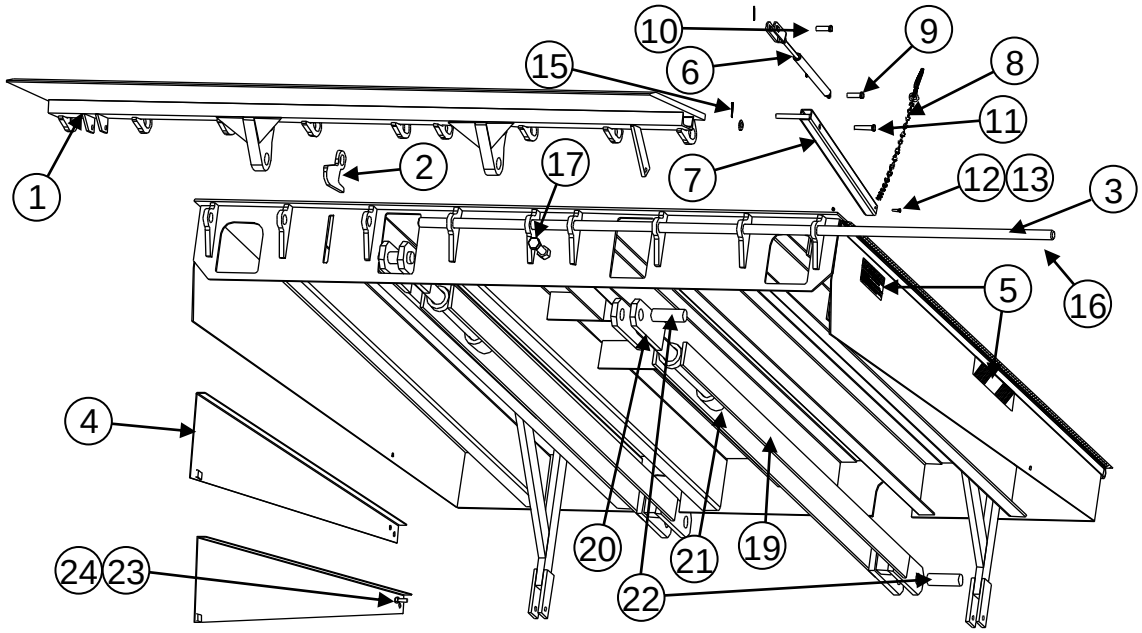

Item	Qty.	Description / Model				P/N	Note
1	1	Lip Weldment	25K	70”	16”	42-2855	
					18”	42-2856	
					20”	42-2857	
				6’	16”	42-2864	
					18”	42-2865	
					20”	42-2866	
				6.5’	16”	42-2873	
					18”	42-2874	
					20”	42-2875	
				7’	16”	42-2882	
					18”	42-2883	
					20”	42-2884	
				7’ Tapered	16”	42-2891	
					18”	42-2892	
					20”	42-2893	
			30-35k	70”	16”	42-2858	
					18”	42-2859	
					20”	42-2860	
				6’	16”	42-2867	
					18”	42-2868	
					20”	42-2869	
				6.5’	16”	42-2876	
					18”	42-2877	
					20”	42-2878	
				7’	16”	42-2885	
					18”	42-2886	
					20”	42-2887	
				7’ Tapered	16”	42-2894	
					18”	42-2895	
					20”	42-2896	

			40K	70”	16”	42-3176	
					18”	42-3177	
					20”	42-3178	
				6’	16”	42-3179	
					18”	42-3180	
					20”	42-3181	
				6.5’	16”	42-3182	
					18”	42-3183	
					20”	42-3184	
				7’	16”	42-3185	
					18”	42-3186	
					20”	42-3187	
				7’ Tapered	16”	42-3188	
					18”	42-3189	
					20”	42-3190	
			45-50K	70”	16”	42-2861	
					18”	42-2862	
					20”	42-2863	
				6’	16”	42-2870	
					18”	42-2871	
					20”	42-2872	
				6.5’	16”	42-2879	
					18”	42-2880	
					20”	42-2881	
				7’	16”	42-2888	
					18”	42-2889	
					20”	42-2890	
				7’ Tapered	16”	42-2897	
					18”	42-2898	
					20”	42-2899	
2	1	Lip Safety Lock Lug				43-1165	
3	1	Hinge Rod		70”			
				6’		43-1333	
				6.5’		43-1334	
				7’		43-1177	
4	1 1 1	Telescoping Side Skirt Kit – 6’ Telescoping Side Skirt Kit – 8’ Telescoping Side Skirt Kit – 10’				42-0393 42-0394 42-0395	
5	1	Dock Leveler Decal Kit				42-0392	1
6	1	Lip Assist Gas Spring c/w Clevis End				42-1568	
7	1	Below Dock Control Lever				42-2016	
8	1	Below Dock Control Pull Chain				42-0299	
9	1	Clevis Pin, Gas Spring Base, 3/8” x 1-5/8”				13-0500	
10	1	Clevis Pin, Gas Spring Clevis, 1/2” x 2”				13-0398	
11	1	Clevis Pin, Lever Pivot, 1/2” x 2-1/4”				13-0288	
12	1	Screw, 10-24 x 3/4”				13-0787	
13	1	Nut, Nylock, 10-24				13-0582	
14	2	Washer, 1/2”				13-0267	
15	3	Cotter Pin, 1/8” x 1”				13-0171	
16	10	Cotter Pin, 1/4” x 1-3/4”				13-0992	
17	1	Lip Stop Bolt				13-0302	
18	2	Washer, 3/8” SAE Flat				13-0203	

19	2	Tension Rod Sleeve	6’	20-35K 40-50K	42-2807 42-2804	
			8’	20-35K 40-50K	42-2803 42-2801	
			10’	20-35K 40-50K	42-2808 42-2806	
20	2	Tension Rod Threaded		20-35K 40-50K	42-2802 42-2800	
21	2	Nut		20-35K 40-50K	13-2822 42-3210	
22	4	Tension rod pivot pin		20-35K 40-50K	43-1162 43-1152	
23	2	Bolt, 3/8”-16 x 1¼” long, Carriage Head			13-0122	
24	2	Nut, 3/8”-16, Nylock			13-0707	

1 – For correct decal placement, see safety section.

Section 2 – Lip Extend Assembly

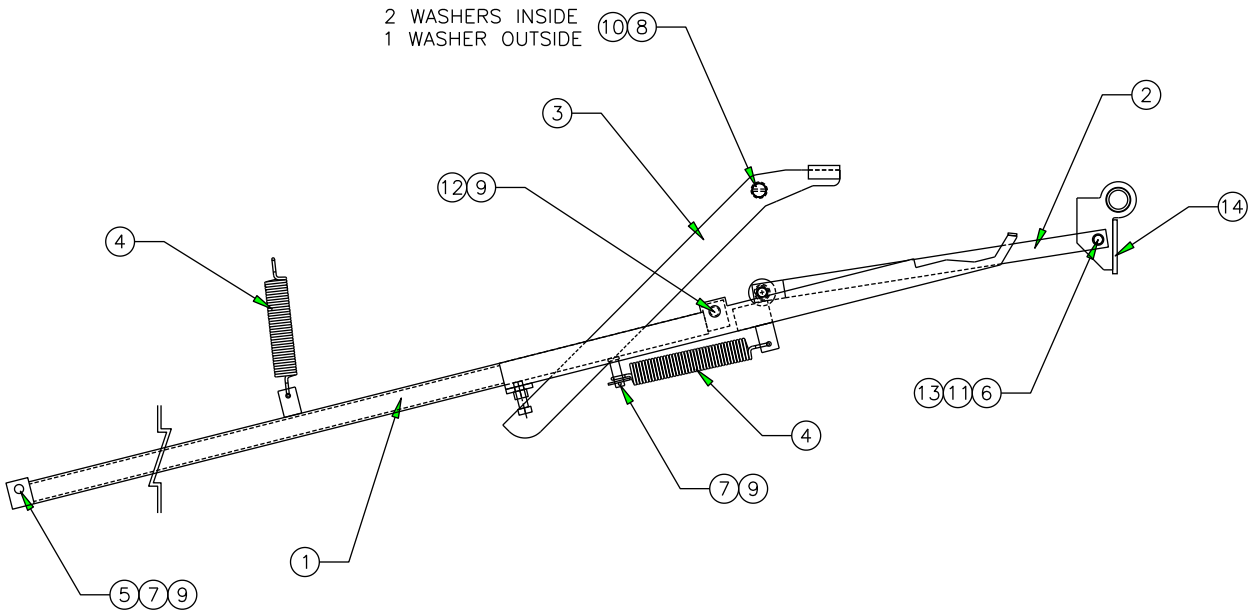

Item	Qty.	Description / Model		P/N	Note
1	1	Rear Push-bar Assembly (includes 4, 7, 9, 12)	6’ Long Dock, 19” Frame 6’ Long Dock, 23” Frame 8’ Long Dock, 19” Frame 8’ Long Dock, 23” Frame 10’ Long Dock, 19” Frame 10’ Long Dock, 23” Frame	42-2245 42-2246 42-2219 42-2220 42-2221 42-2222	
2	1	Front Push-bar Assembly (includes 11)	6’ 8’	42-3825 42-3211	
3	1	Kick-out Lever		42-2182	
4	2	Spring		13-1955	
5	1	Clevis Pin – ½” x 2-1/2”, Plated		13-1099	
6	1	Shoulder Bolt – ½” x 1-3/4”		13-1801	
7	2	Flat Washer, 1/2”, Plated		13-0267	
8	3	Flat Washer, 3/4”, Plated		13-0649	
9	3	Cotter Pin, 1/8” x 1” LG		13-0171	
10	1	Cotter Pin, 1/8” x 1-1/2” LG		13-0397	
11	1	Sleeve Bushing		13-0434	
12	1	Clevis Pin, ½” x 2-1/4”, Plated		13-0288	
13	1	Hex Nut, 3/8 – 16, Nylock		13-0707	
14	1	Lip Cam		42-3805	
		Assembly (includes items 1-12; lip cam selected separately)	6’ Long Dock, 19” Frame 6’ Long Dock, 23” Frame 8’ Long Dock, 19” Frame 8’ Long Dock, 23” Frame 10’ Long Dock, 19” Frame 10’ Long Dock, 23” Frame	42-2249 42-2250 42-2257 42-2258 42-2259 42-2260	

Section 3 – Air Blower Motor Assembly

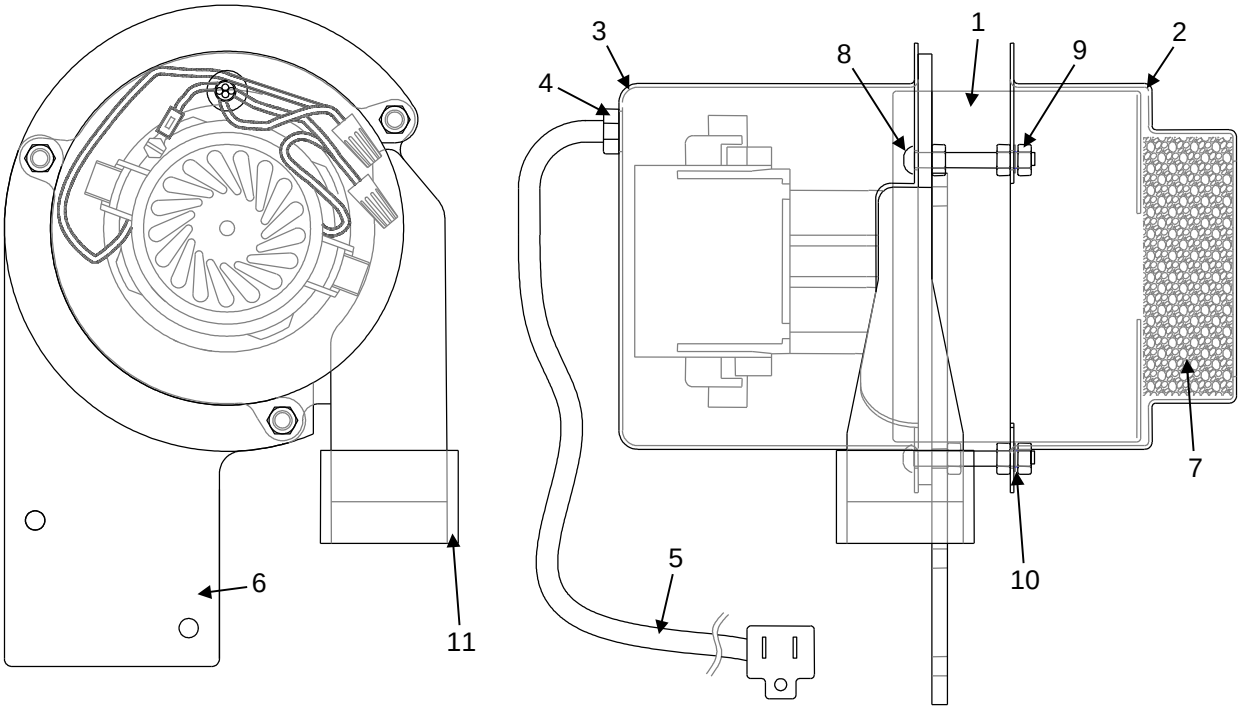

Item	Qty.	Description	P/N	Note
1	1	Blower Motor	13-1847	
2	1	Blower Cover	43-0896	
3	1	Motor Cover	43-0894	
4	1	Strain Relief Grommet	13-1739	
5	1	Power Cord	13-1738	
6	1	Motor Mount Flange	43-0908	
7	1	Intake Filter	43-0923	
8	3	Screw, ¼” – 20 x 2” Long, Button Head, Plated	13-2018	
9	9	Nut, ¼” – 20, Plated	13-0334	
10	3	Lock Washer, ¼”, Plated	13-0335	
11	1	ABS Pipe Coupler	13-1796	
		Full Assembly (includes items 1-11)	42-1429	

Section 4 – Air Pan Assembly

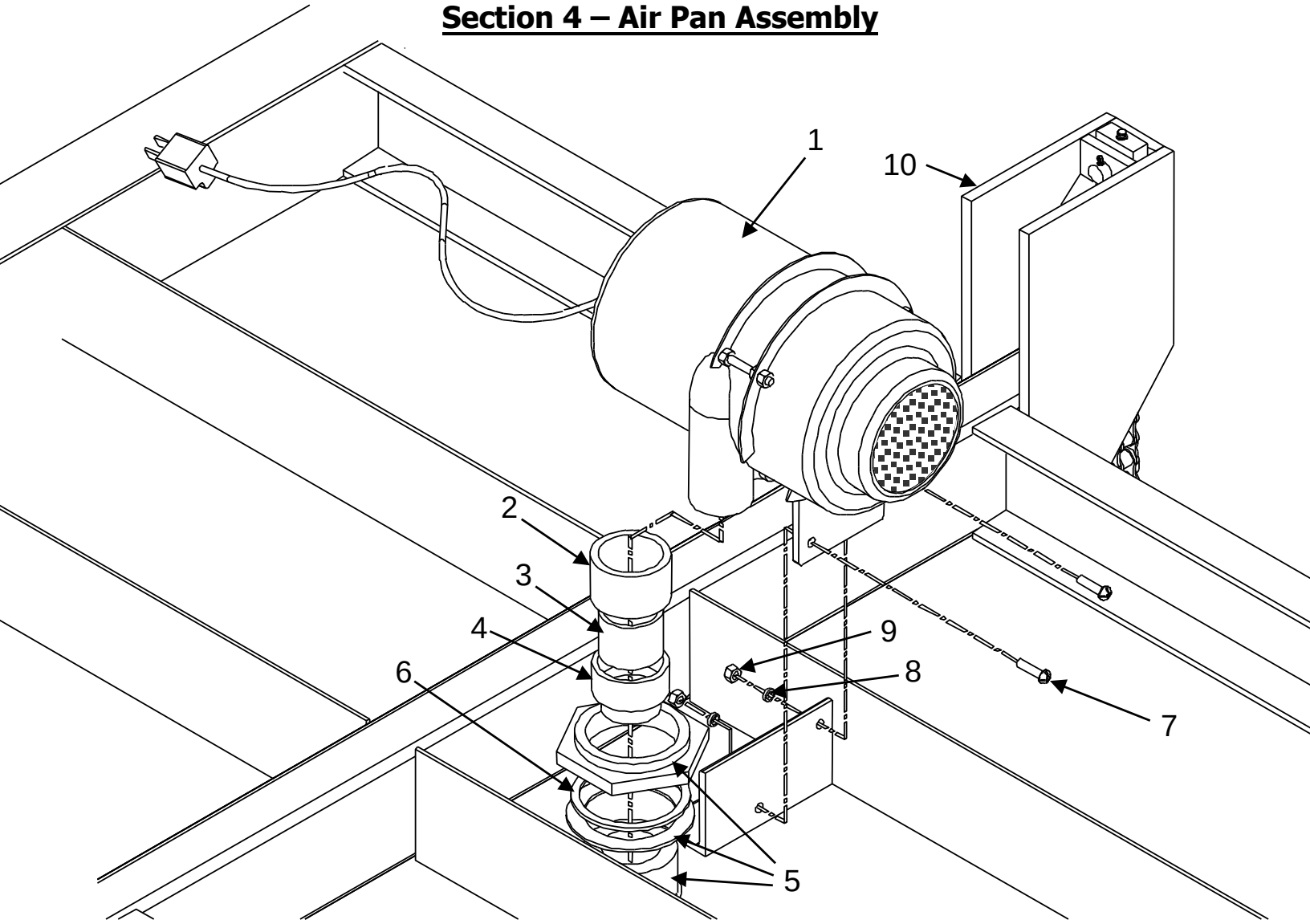

Item	Qty.	Description		P/N	Note
1	1	Complete Blower Motor Assembly		42-1429	
2	1	ABS Pipe Coupler, Ø1-1/2”		13-1796	
3	1	ABS Pipe, Ø1-1/2”		43-0978	
4	1	ABS Adapter, 1-1/2” MNPT x 1-1/2” Female Pipe		13-1797	
5	1	ABS Tank Fitting, 1-1/2” (includes nut and washer)		13-1775	*
6	1	Spacer Washer		13-1965	
7	2	Bolt, ¼” – 20, 1” Long, Plated		13-0623	
8	2	Lock Washer, ¼”, Plated		13-0335	
9	2	Nut, ¼” – 20, Plated		13-0334	
10	1	Top Pan Weldment	6’ Dock 8’ Dock 10’ Dock	42-2237 42-2238 42-2024	
11	N/S	Tank Fitting Wrench	Optional	42-2173	

* ABS Tank fitting (item 5) is included with the Airbag (shown in lifting assembly)
* Left hand thread
* Optional tool (item 11) is available to order to ease tightening tank fitting

Section 5 – Lifting Assembly

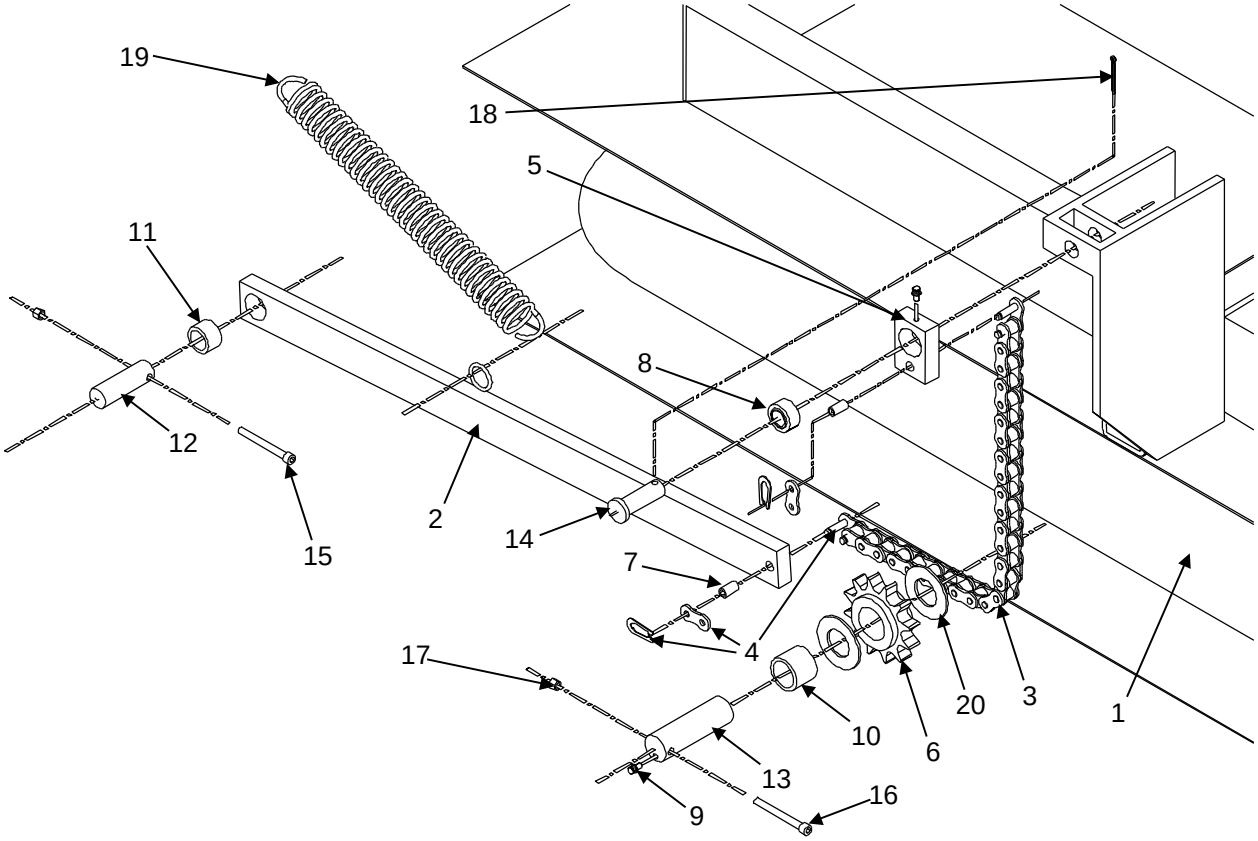

Item	Qty.	Description / Model		P/N	Note
1	1	Airbag Assembly	6' Dock 8' Dock 10' Dock	42-3839 42-3838 42-3840	* * *
2	2	Lower Chain Pull-bar Assembly	6' Dock 8' Dock 10' Dock	42-3843 42-2155 42-2155	** ** **
3	2	Chain	6' Dock 8' Dock 10' Dock	43-1347 43-1317 43-0988	
4	4	Chain Master Link		13-1973-1	
5	2	Upper Chain Pull-bar		43-0910	
6	2	Sprocket		43-0990	
7	4	Chain Bushing		43-0213	
8	2	Spherical Bearing		13-1848	
9	4	Grease Fitting		13-0655	
10	2	Sprocket Bearing (also includes bearing race 13-2102)		13-2101	
11	2	Lower Pull-bar Bushing		13-1904	
12	2	Lower Pull-bar Pin Assembly (c/w weld-on collar)		42-2171	
13	2	Sprocket Pin Assembly (c/w weld-on collar)		42-2153	***
14	2	Clevis Pin		13-0958	
15	2	Socket Head Cap Screw, ¼" – 20, 1-1/2" Long		13-1528	
16	2	Socket Head Cap Screw, ¼" – 20, 2" Long		13-1850	
17	4	Nut, Nylon Locking		13-0270	
18	2	Cotter Pin		13-0171	
19	2	Tension Spring		13-1955	
20	4	SAE Flat Washer, 1-1/4", Plated		13-3700	

* Airbag (item 1) includes ABS tank fitting and adhesive tape

** Lower Chain Pull-bar Assembly (item 2) includes bushings (items 7 and 11)

*** Sprocket Pin Assemblies (item 13) includes grease fitting (item 9)

Section 6 – Frame Assembly

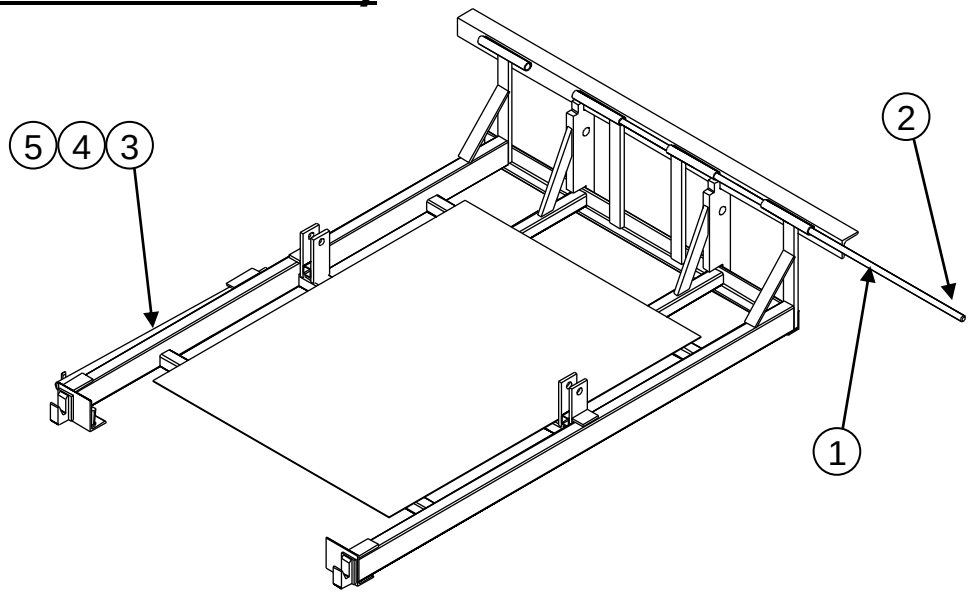

Item	Qty	Description		P/N	Note
1	1	Hinge Rod	70” Wide Docks 6’ Wide Docks 6.5’ Wide Docks 7’ Wide Docks	43-0462 43-0154 43-0155 43-0156	
2	2	Spring Pin 1/4“ x 2”		13-0555	
3	1	Maintenance / Support Stand	Standard Dock (40”) Low Frame Dock (38 1/2”)	43-0262 43-0521	
4	1	Fender Washer, ¼”		13-0271	
5	1	Tek Screw, ¼”-14 x 1”		13-0273	

Section 7 – Optional Equipment

Option	Qty	Description	P/N	Note
Bumpers	2	Standard Bumpers	61-0001	1
Weather Seals	6’ 8’ 10’	Brush Seal and Mounting Extrusion Kit Brush Seal and Mounting Extrusion Kit Brush Seal and Mounting Extrusion Kit	61.0025 61-0024 61-0037	
Photo Eye		Photo Eye, Diffuse Reflection 5 m (16’) Cable Bracket	13-2435 13-2436 13-2437	

1 – For custom bumper sizes and applications, please contact your nearest Nordock representative or call 1-866-885-4276.

Section 8 – Control Panels

Volts Phase	Description	P/N	Note
115/1/60	Standard Panel / Single Pushbutton (NEMA 4)	13-1791	
115/1/60	Single Pushbutton (NEMA 4) with Hinged Lockable Cover	13-2200	
115/1/60	Optional Panel / Single Pushbutton, Interlock (NEMA 4)	48-0065	
115/1/60	Optional Panel / Single Pushbutton, Photo-eye Interlock (NEMA 4)	48-0080	

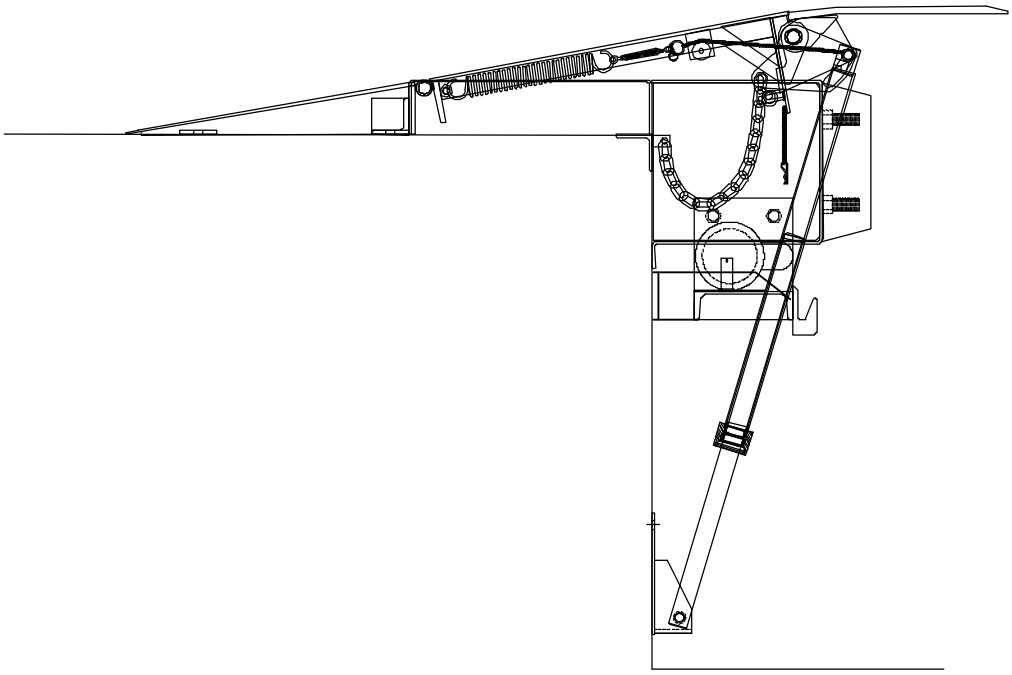

Hydraulic Dock Leveler
Surface Mount Series

Model (SMD), EZ-DOCK™

Parts Manual

This manual applies to SMD series dock levelers manufactured on or after November 2016, with Serial Number(s) 39147 and greater.

P/N 49-0240-A

NORDOCK INC.
Website: nordockinc.com ~ Email: sales@nordockinc.com ~ Toll free: 866-885-4276
Nordock Inc. reserves the right to make changes to specifications without notice or obligation. Nordock products may be covered by various U.S. and foreign patents or pending applications.

Parts and Service Table

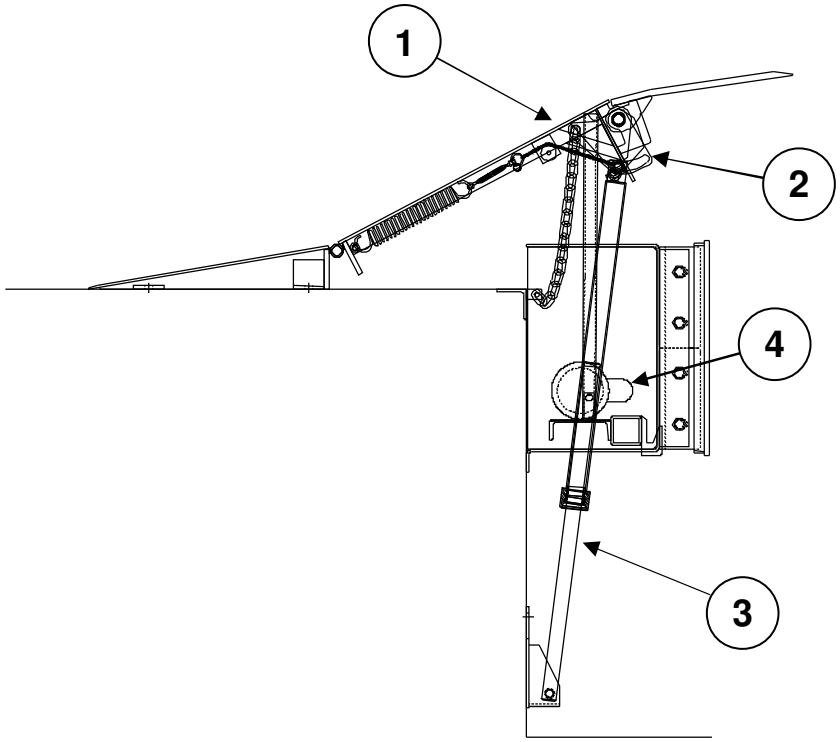

Item Number/ Section	Description
1	Deck, Lip and Ramp Assembly
2	Lip Actuator Assembly
3	Hydraulic Cylinder
4	Power Pack and Related Hydraulic Components
5	Control Panel (not shown)

Note: Not all parts and weldments are noted in this manual. Only those that are serviceable and/or replaceable will be listed. For additional information on those parts not included in this manual, please contact Nordock. Remember to make note of the model and serial number of the unit for accurate parts and service.

Section 1 – Deck, Lip and Ramp Assembly

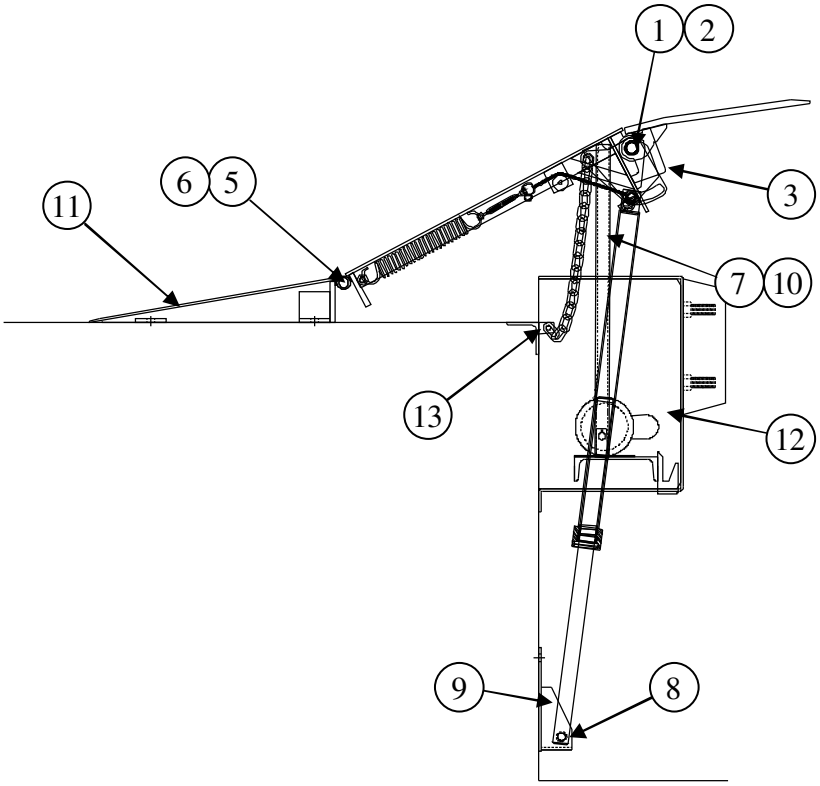

Item	Qty.	Description / Model		P/N	Note
1	1	Lip Hinge Rod	6' 6.5' 7'	43-0148 43-0149 43-0150	
2	2	Roll Pin, ¼" x 2		13-0555	
3	1	Lip Safety Lock Lug		43-0252	
4	1	Dock leveler Decal Kit (not shown)		42-0392	1
5	1	Rear Hinge Rod	6' 6.5' 7'	43-0154 43-0155 43-0156	
6	2	1/4" x 2" Roll Pin		13-0555	
7	1	Maintenance / Support Strut		43-1104	
8	1	Lower Cylinder Pin		42-2505	
9	1	Cylinder Wall Bracket		42-2500	
	2	Brushed Weather Seal (not shown)		43-1153	
10	1	Maintenance Strut clip and chain		42-3800	
	2	Floor riser (not shown for clarity)		C/F	
11	1	Ramp		C/F	
12	1 1	Bumper box, Left Bumper box, right		C/F	
13	1	Actuator Chain Bracket		42-2503	

1 – For correct decal placement, see safety section.
C/F – Consult Factory

Section 2 – Lip Actuator Assembly

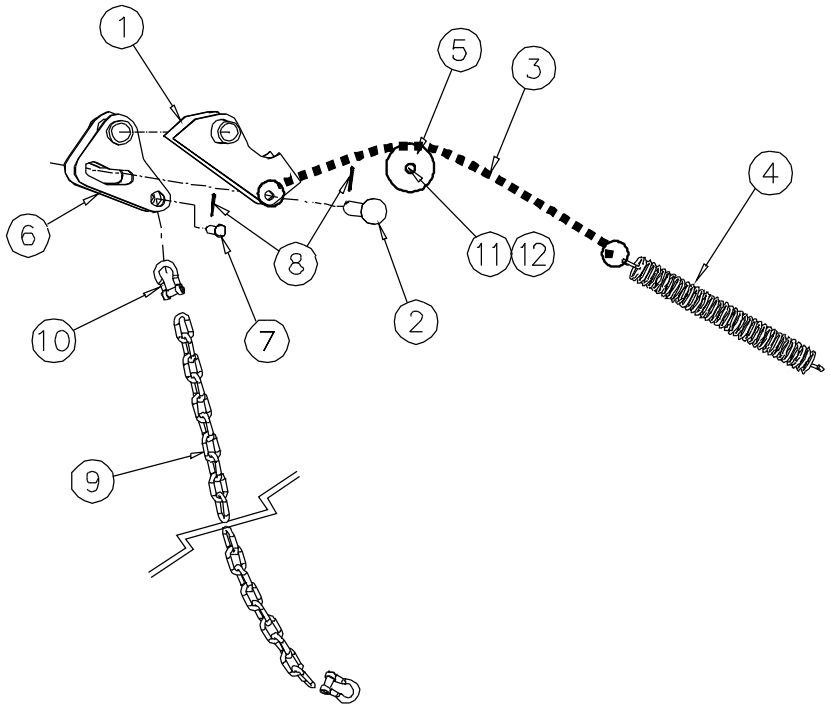

Item	Qty.	Description / Style		P/N	Note
1	1	Lip Cam Weldment		13793-LEW	
2	1	Pin, Lip Cam, ¾" Dia.		42-0687	
3	1	Cylinder Return Chain c/w Rings, #4 Twist		19416-AC	
4	1	Cam Return Spring		13-1955	
5	1	Roller		43-0875	
6	1	Lip Extend Actuator		13793-LAW	
7	1	Clevis Pin, 3/4" Dia. x 2" Steel Plated		13-1208	
8	2	Cotter Pin, 3/16" x 1 3/4"		13-0304	
9	1	Actuator Chain (1/4" Gr. 30)	4.5" ramp 8" ramp	43-1109 11663-AC	
10	2	Shackle, 5/16" Dia. Forged Steel c/w Rd Pin		13-0242	
11	1	Clevis Pin, ½" x 1-½"		13-1073	
12	1	Cotter Pin, 1/8" x			

Section 3 – Hydraulic Cylinders

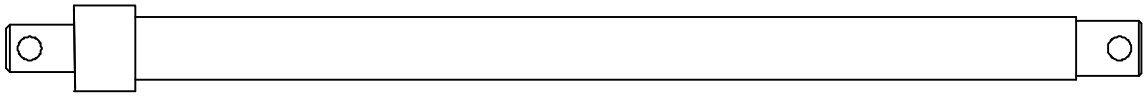

Ram Dia.	Description / Model	P/N	Note
1 ½"	Seal Kit	C3-0025	
	Deck Lift Cylinder, 34-7/16" Closed, 29-3/4" Stroke	C1-0095	

The cylinder must be oriented with the hose fitting towards the building wall.

Section 4 – Power Pack and Related Hydraulic Components

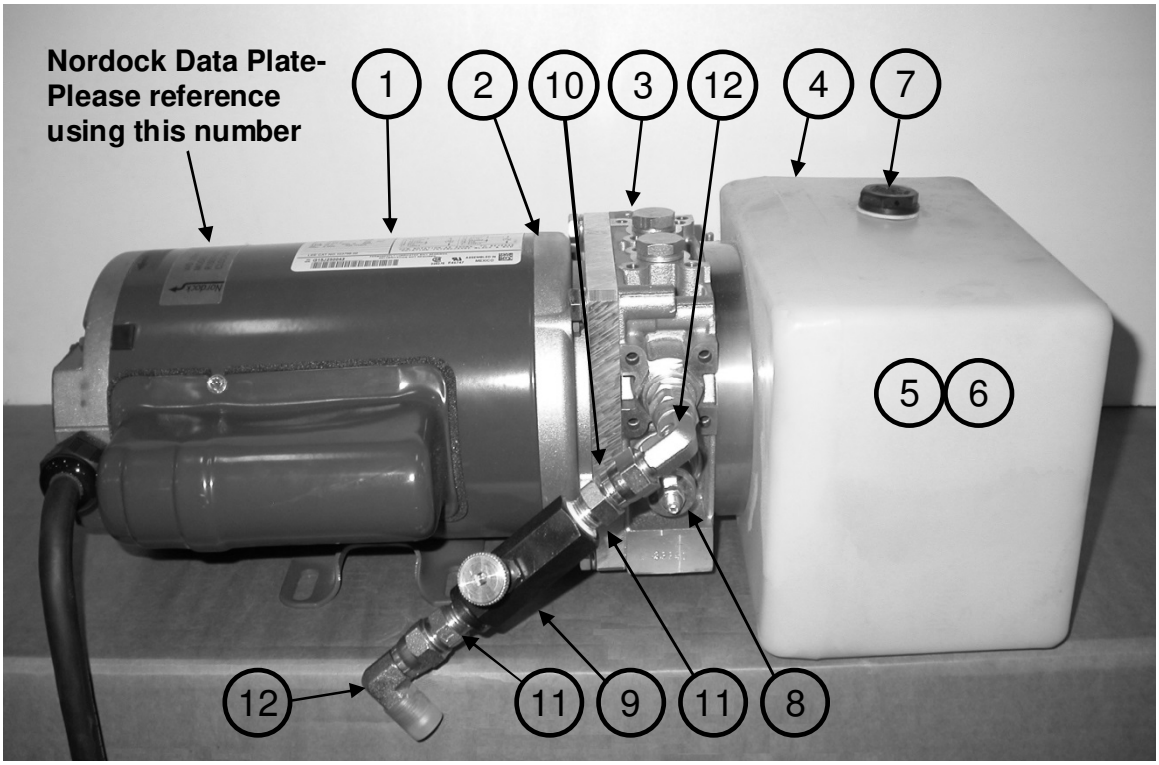

Item	Qty.	Description / Model		P/N	Note
		Complete Power Pack Assembly (Pts 1-11 below)	115 / 230 V 1 Ph. 208 / 230 / 460 V 3 Ph. 575 V 3 Ph.	13-3447 13-3448 13-3449	
Power Pack Components:					
1	1	Drive Motor	115 / 230 v. 1 PH 230 / 460 v. 3 PH 575 v. 3 Ph		1
2	1	Motor Coupler	Standard Duty		
3	1	Manifold Assembly	Standard Duty		
4	1	Hydraulic Oil Reservoir Kit		13-3598	
5	1	Pump Assembly (Inside Tank)			
6	1	Oil Pickup Screen and Tube (Inside Tank)			
7	1	Cap, Filler/ Vent			
8	1	Pressure Relief Valve Cartridge			
9	1	Flow Control Valve, ¼" NPT		13-1020	
10	1	Hydraulic Fitting, 1/4 (4) MNPT x 9/16 (6) FJIC Swivel		13-3518	
11	2	Hydraulic Fitting, 9/16 (6) MJIC x 1/4 (4) MNPT		13-0100	
12	2	Hydraulic Fitting, 90° 9/16 (6) FJIC x 9/16 (6) MJIC		13-0494	

Note 1 – Consult factory when ordering individual power pack components.

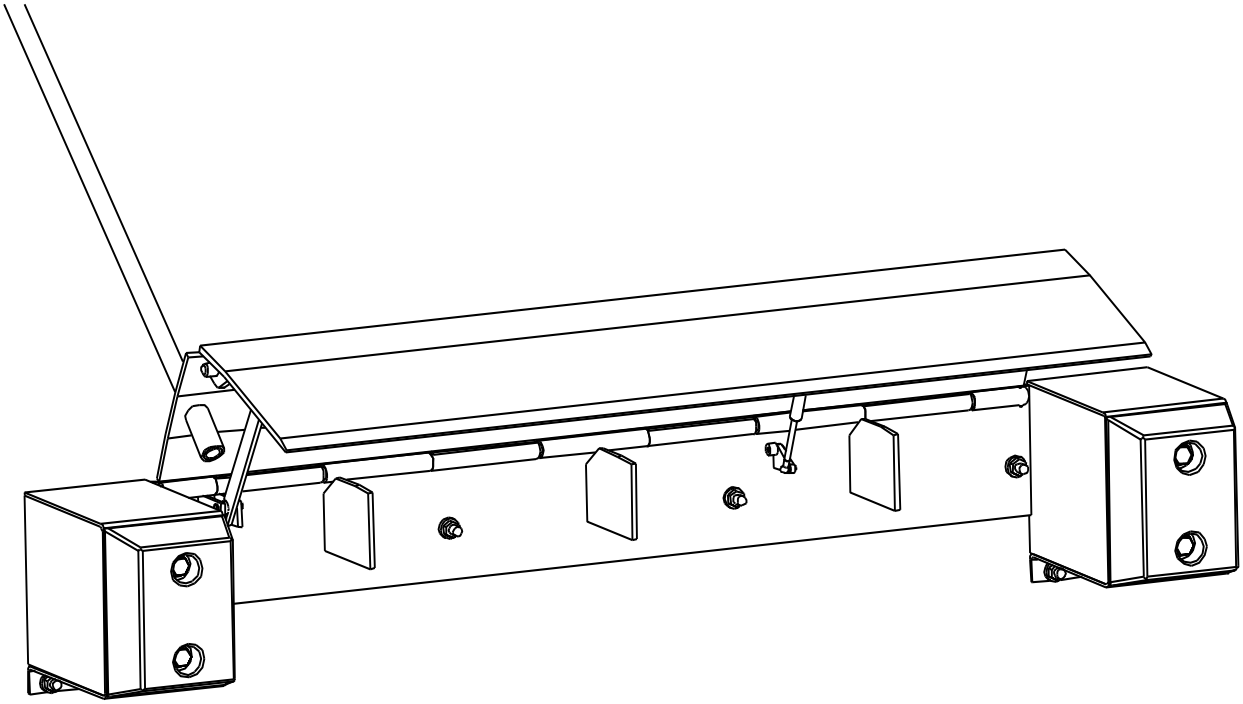

Mechanical Dock Leveler
Edge Mount LEVER™ Series
Model (EM)

20,000 to 50,000 lbs. Capacity

Parts Manual

This manual applies to all Mechanical Edge Mount Dock Levelers shipped on or after 2013/02/12, with Serial number(s) 24171 and greater.

P/N: 49-0194-A

NORDOCK INC.

Website: nordockinc.com ~ Email: sales@nordockinc.com ~ Toll free: 866-885-4276

Nordock Inc. reserves the right to make changes to specifications without notice or obligation. Nordock products may be covered by various U.S. and foreign patents or pending applications.

Parts and Service Tables

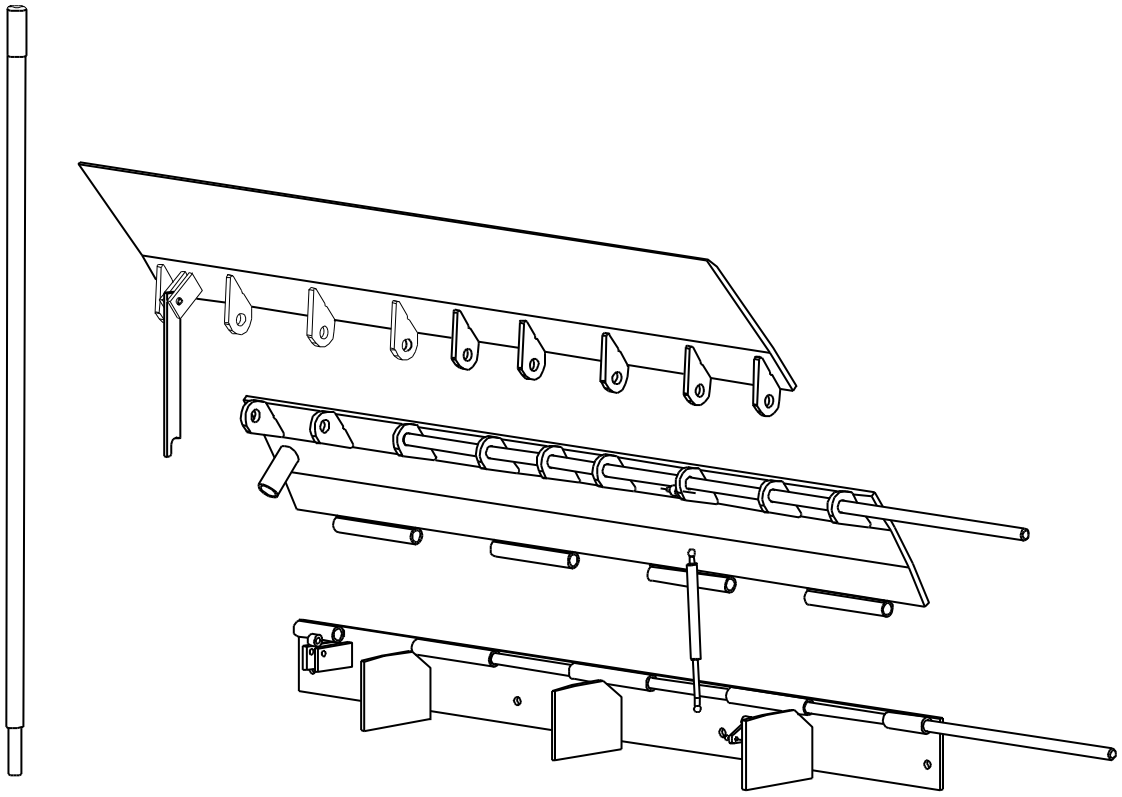

Item Number/ Section	Description
1	Base Assembly
2	Deck Assembly
3	Lip Assembly

Note: Not all parts and weldments are noted in this manual. Only those that are serviceable and /or replaceable will be listed. For additional information on those parts not included in this manual, please contact Nordock. Remember to make note of the model and serial number of the unit for accurate parts and service.

Section 1 – Back Plate Assembly

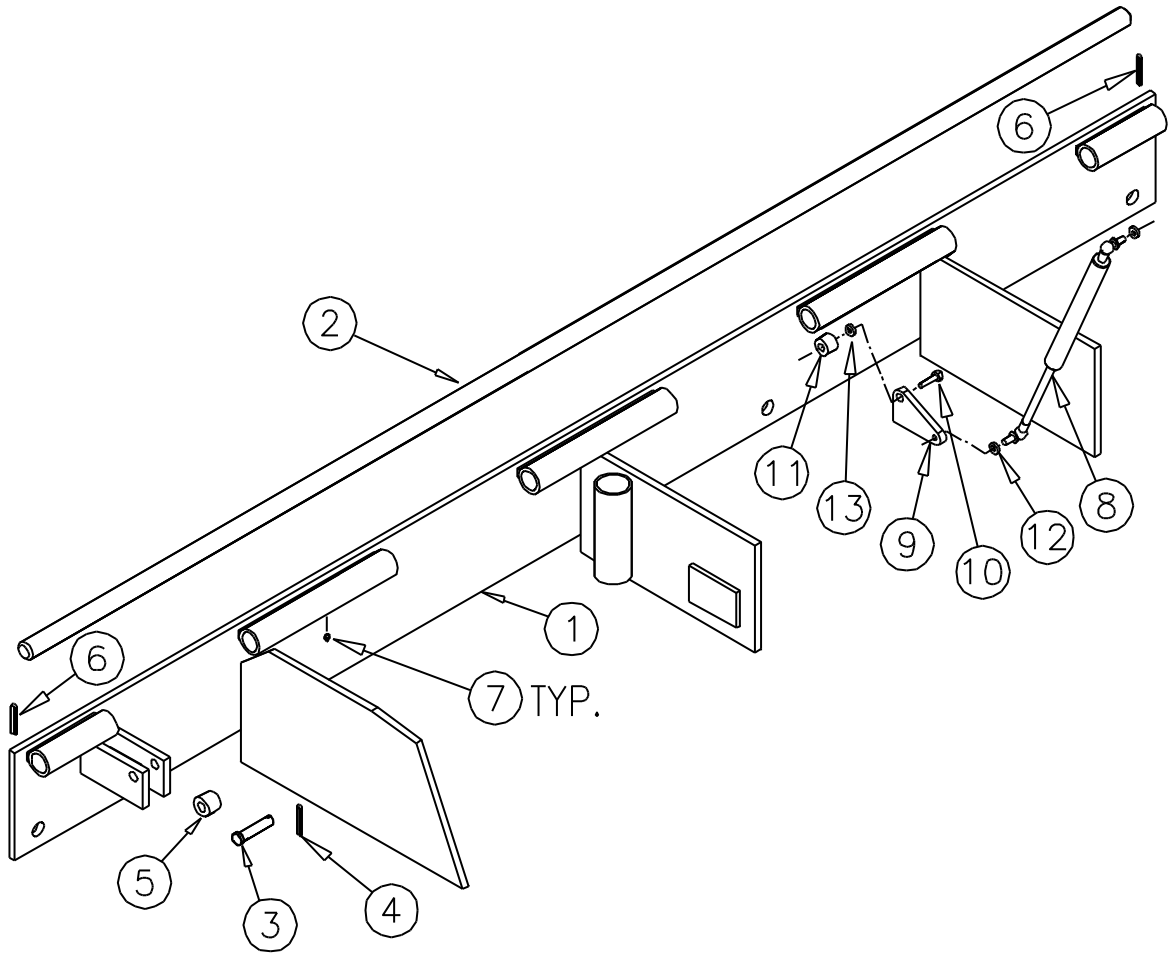

Item	Qty	Description / Model		P/N (Width)				Note
				66”	72”	78”	83”	
1	1	Back Plate Weldment	20K	42-0871	42-0501	42-0691	42-1176	
			30K	42-0689	42-0690	42-1175	42-0692	
			40K	42-0990	42-0245	42-0977	42-1177	
			45-50K	42-1563	42-1570	42-1551	42-1577	
2	1	Rear Hinge Rod		43-0302	43-0154	43-0155	43-0156	
3	1	Clevis Pin, 1/2" x 2 1/2”					13-1099	
4	1	Cotter Pin, 1/8” x 1”					13-0171	
5	1	Roller, 1” dia. X 1 3/8” long					43-0821	
6	2	Spring Pin					13-0555	
7	A/R	Grease Fitting, 3/16” drive in					13-0655	

Item	Gas Spring			Description	P/N	Note
	Qty -1	Qty -2	Qty -3			
8	1	2	3	Gas Spring, 16 3/8” long, c/w ends	13-3201	
9	1	2	3	Gas Spring Pivot Bracket, 3/8”NC thread	43-1228	
10	1	2	3	Bolt, Shoulder, ½ x ½, Plated	13-0965	
11	1	2	3	Pivot Stud, 3/8”NC thread	43-1229	
12	2	4	6	Lock washer, 3/8”	13-0767	
13	1	2	3	Lock washer, 1/2”	13-0688	

Section 2 – Deck Assembly

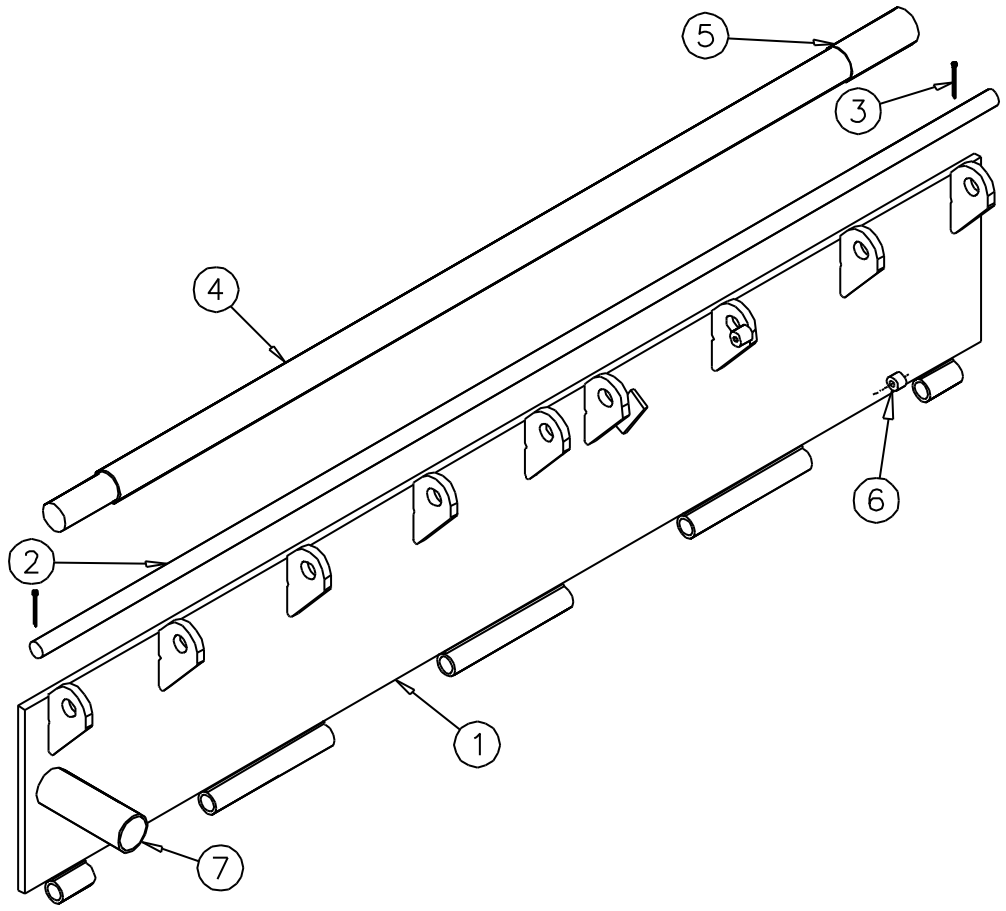

Item	Qty.	Description / Model		P/N (Width)				Note
				66”	72”	78”	83”	
1	1	Deck Weldment	20K	42-0693	42-0694	42-0695	42-0696	
			30K	42-0697	42-0688	42-0698	42-0699	
			40K	42-0991	42-0246	42-0976	42-1178	
			45K	42-1564	42-1569	42-1550	42-1578	
			50K	42-1565	42-1580	42-1596	42-1593	
2	1	Lip Hinge Rod		43-0303	43-0148	43-0149	43-0150	
3	2	Cotter Pin, ¼ x 1 ¾”					13-0992	

Item	Qty.	Description / Model	P/N	Note
4	1	Deck Handle Weldment	42-1543	
5	1	Handle Grip, 4 ½” long	13-0514	
6	1	Pivot Stud, only if equipped with lip assist gas spring	43-0197	
7	Ref.	Handle Pocket x 4” Long (part of Item 1 weldment)	43-0277	

Section 3 – Lip Assembly

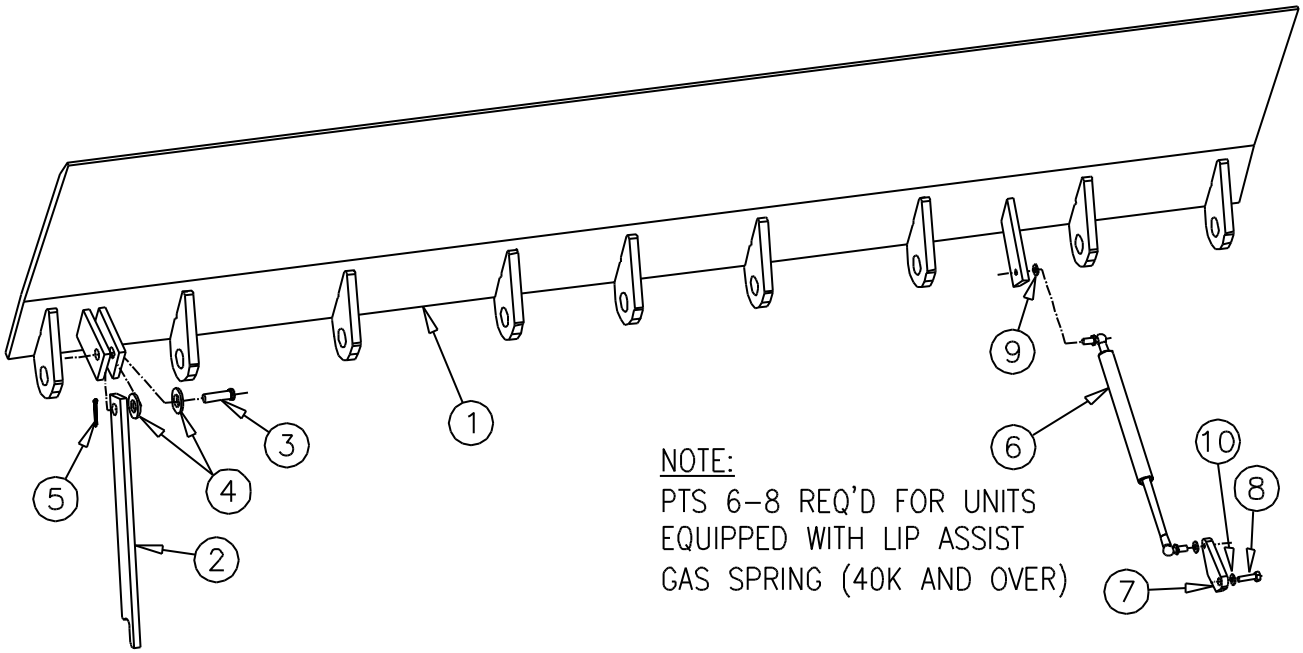

Item	Qty	Description / Model			P/N (Lip Width)					Note
					66”	72”	78”	83”	83”Taper	
1	1	Lip Weldment	20K	16” 18	42-0591 42-0594	42-0566 42-0595	42-0592 42-0596	42-0593 42-0597	42-1179 42-1180	
			30K	16” 18”	42-0598 42-0601	42-0551 42-0602	42-0599 42-0603	42-0600 42-0604	42-1181 42-1182	
			40K	16” 18	42-0992 42-1185	42-0247 42-1186	42-0975 42-1187	42-1183 42-1188	42-1184 42-1189	
			45K	16” 18”	42-1494	42-1571 42-1576	42-1552	42-1579		
			50K	16” 18	42-1495	42-1581 42-1586		42-1594		

Item	Qty	Description / Model	P/N	Note
2	1	Lip Extension Arm	43-0171	
3	1	Clevis Pin, 5/8” x 1 ¾”	13-1731	
4	2	Washer, 5/8”	13-2147	
5	1	Cotter Pin, 1/8” x 1”	13-0171	
Lip Assist Gas Spring, if Equipped:				
6	1	Gas Spring Assembly, 12 3/8” long	42-2399	
7	1	Lip Pivot Bracket	43-1019	
8	1	Bolt, Shoulder, 3/8 x 1/2, Plated	13-1085	
9	2	Washer, Lock, 5/16”, Plated	13-0946	
10	1	Washer, Lock, 3/8”, Plated	13-0767	

Section 4 – Bumpers and Boxes

Item	Qty	Description / Model	P/N	Note
Standard				
1	2	Bumper, Molded 4” x 10” x 13”	21-0005	
2	2	Bumper Box, 10” x 14” x 13 ½” long, 14” projection	61-0013	
3	4	Nut, 5/8” NC-11, plated, (for molded bumper only)	13-0289	
4	4	Washer, 5/8” flat, plated, (for molded bumper only)	13-0952	
5	2	Optional Bumper, Laminated, 4 1/2” x 10” long, FF-410-8	61-0027	
Optional 20” Laminated type:				
4	2	Bumper, Laminated, 4 1/2” x 20” long, FF-420-8	61-0042	
5	2	Bumper Box, 10” x 14” x 20 ½” long	61-0096	
Optional 20” Steel Face or Spring type:				
6	2	Steel Spring Bumper, L and R	61-0012	
7	2	Steel Face Bumper, 5” x 20” long, FFS-520-8	61-0069	
8	2	Bumper Box, 10” x 13” x 20 ½” long	61-0125	

NORDOCK®

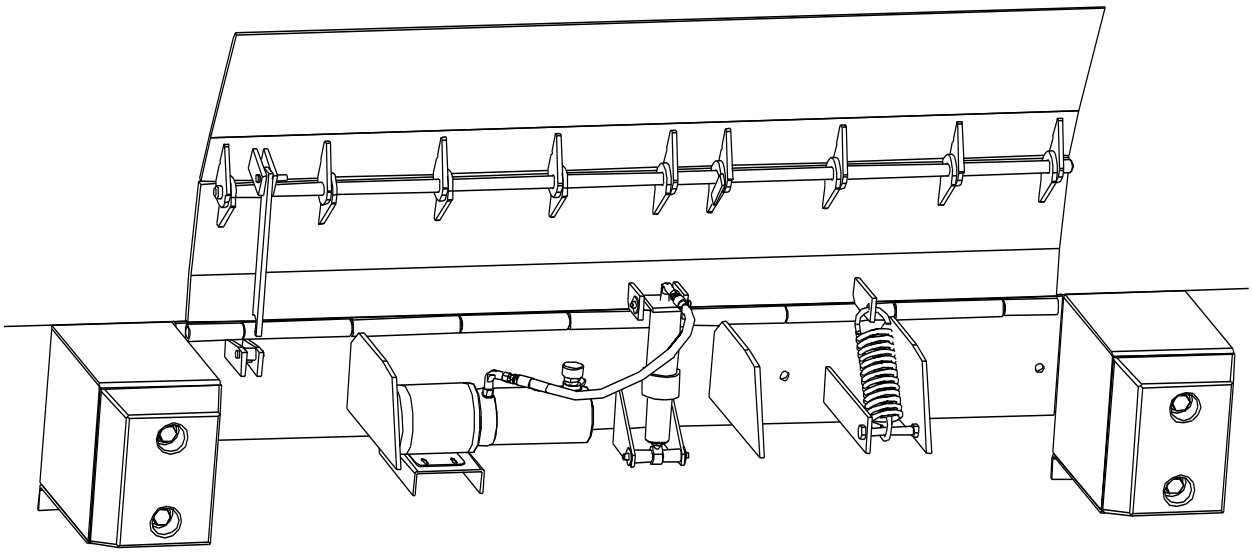

Hydraulic Dock Leveler
Edge Mount PUSH-BUTTON™ Series
Model (EH)

20,000 & 30,000 lbs. Capacity

Parts Manual

This manual applies to EH series dock levelers manufactured on or after 2014/08/01 with serial number(s) 29300 and greater.

P/N:49-0068Rev.N

NORDOCK INC.
Website: nordockinc.com ~ Email: sales@nordockinc.com ~ Toll free: 866-885-4276
Nordock Inc. reserves the right to make changes to specification Nordock Inc. reserves the right to make changes to specifications without notice or obligation. Nordock products may be covered by various U.S. and foreign patents or pending applications.

Acceptable Lubricants and Oils

Hydraulic
Oils used in the hydraulic system must meet minimum ISO grade **32** standard. E.G.:

COMMERCIAL OIL Multi-Vis MV32
EXXON UNIVIS HVI 26
TEXACO AW 32
U.S.OIL CO. Zinc Free (#32) Anti-wear hydraulic oil
SHELL TELLUS T32

Grease
Grease used for hinges must meet a minimum EP-2 grade. E.G.:

CHEVRON DURA-LITH EP-2

Light Oil
Light oils used should have good penetration and adhesion qualities.

NOTE: Biodegradable fluids are available for use in the dock leveler. Please consult Nordock for information and instruction.

Hydraulic Adjustment (to be completed by a trained technician only):

Item	Name	Function	Adjustment Increment
11	Pressure Relief Valve -remove red cap	Controls maximum pressure (preset at 2100 psi.) Turn counter-clockwise to lower pressure.	1/8 Turn
12	Flow Control Valve -loosen lock nut	Controls downward speed of deck. Turn clockwise (tighten) to slow downward speed.	1/8 Turn

Parts and Service Tables

Item Number/ Section	Description
1	Base Assembly
2	Deck Assembly
3	Lip Assembly
4	Cylinders
5	Hydraulic Pumps
6	Hydraulic Hoses
7	Control Panels

Note: Not all parts and weldments are noted in this manual. Only those that are serviceable and /or replaceable will be listed. For additional information on those parts not included in this manual, please contact Nordock. Remember to make note of the model and serial number of the unit for accurate parts and service.

Section 1 – Back Plate Assembly

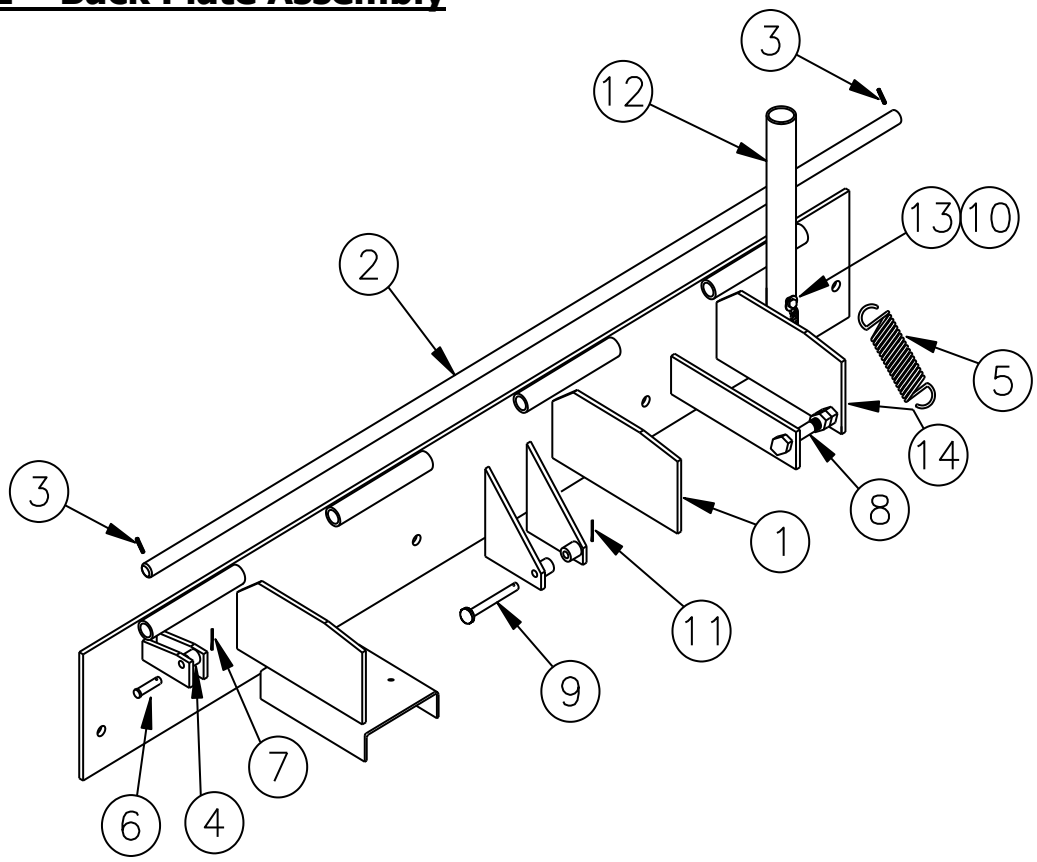

Item	Qty.	Description / Model		P/N	Note
1	1	Back Plate Weldment 20, 30K	66” 72” 78” 83”	42-0760 42-0742 42-0761 42-0762	
2	1	Hinge Rod	66” 72” 78” 83”	43-0302 43-0154 43-0155 43-0156	
3	2	Spring Pin, 1/4" x 2”		13-0555	
4	1	Roller		43-0821	
5	1	Spring, 3” Dia. x 9” overall		21-0017	
6	1	Clevis Pin, 1/2" x 2 1/2”		13-1099	
7	1	Cotter Pin, 1/8” x 1 1/2”		13-0397	
8	1	Bolt, 5/8”-11 Hex Head x 4” Long, thread full length		13-0302	
9	1	Pin, EH, Cylinder, Bottom, ¾” Dia.		42-2901	
10	2	Washer, 1/4" Fender, Plated		13-0271	
11	1	Cotter Pin, 3/16” x 1 3/4		13-0304	
12	1	Maintenance Strut		43-1232	
13	1	Screw, Tek, ¼”		13-2359	
14	1	Decal, Lock out Tag out		43-1287	

Section 2 – Deck Assembly

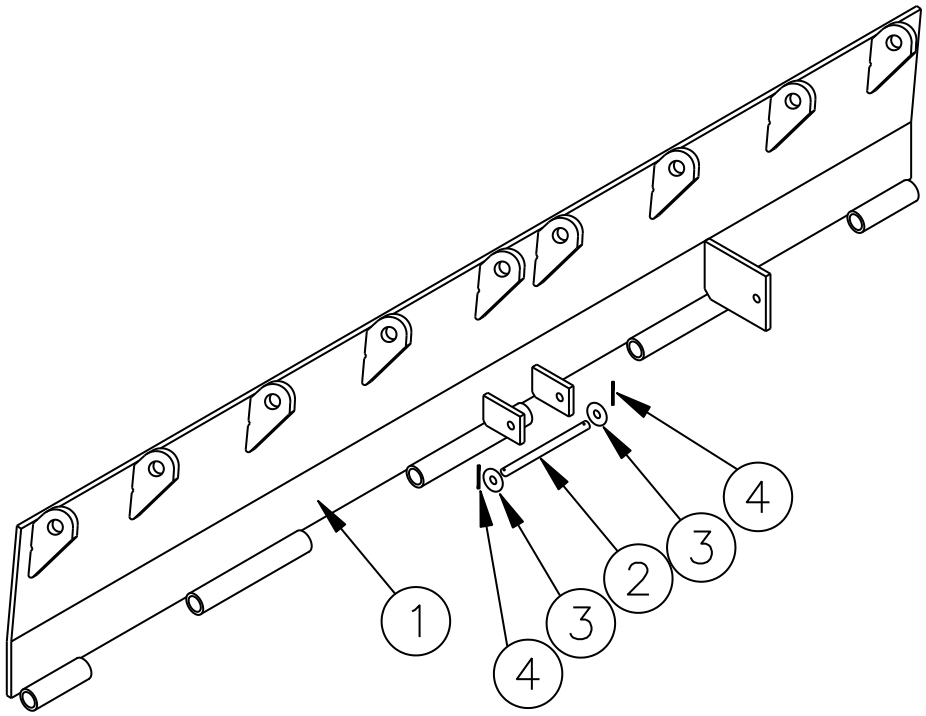

Item	Qty.	Description / Model			P/N	Note
1	1	Deck Weldment	20K	66” 72” 78” 83”	42-0771 42-0740 42-0773 42-0774	
			30K	66” 72” 78” 83”	42-0767 42-0766 42-0768 42-0769	
2	1	Pin, EH, Cylinder, Top, ½” Dia.			43-0309	
3	2	Cotter Pin, 1/8” x 1”			13-0171	
4	2	Washer, 1/2"			13-0267	

Section 3 – Lip Assembly

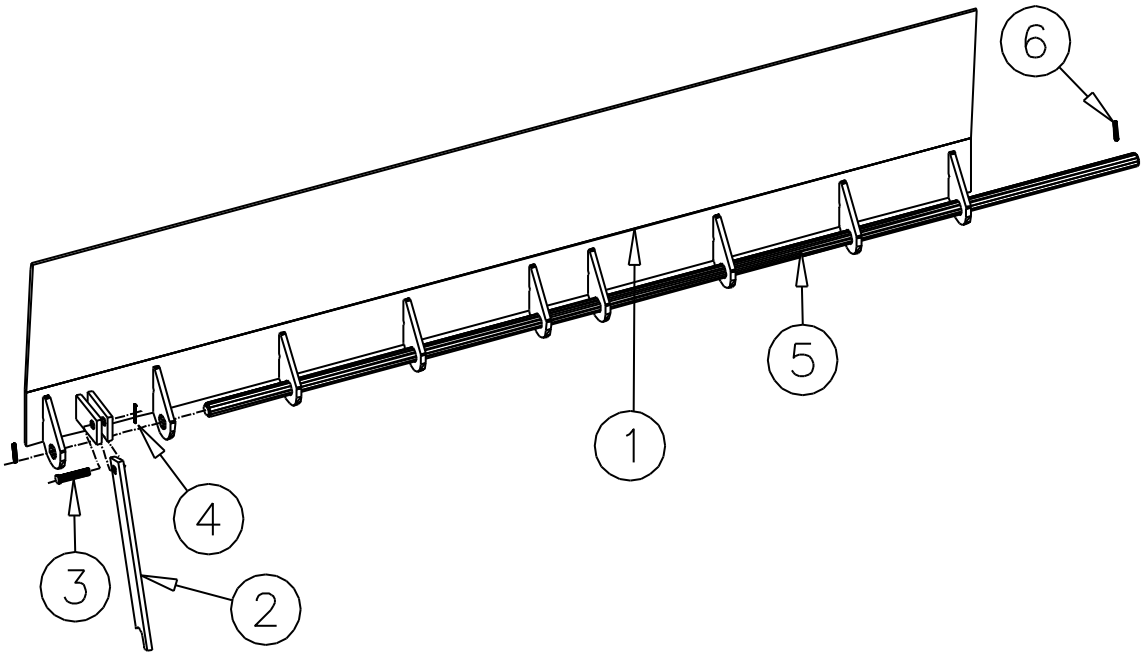

Item	Qty.	Description / Model				P/N	Note
1	1	Lip Weldment	20K	16”	66” 72” 78” 83”	42-0591 42-0566 42-0592 42-0593	
				18”	66” 72” 78” 83”	42-0594 42-0595 42-0596 42-0597	
			30K	16”	66” 72” 78” 83”	42-0598 42-0551 42-0599 42-0600	
				18”	66” 72” 78” 83”	42-0601 42-0602 42-0603 42-0604	
2	1	Lip Extension Arm				43-0171	
3	1	Clevis Pin, 5/8" x 1 3/4"				13-0288	
4	1	Cotter Pin, 1/8” x 1”				13-0171	
5	1	Lip Hinge Rod			66” 72” 78” 83”	43-0303 43-0148 43-0149 43-0150	
6	2	Spring Pin, ¼” x 2”				13-0555	

Section 4 - Power Pack and Related Hydraulic Components

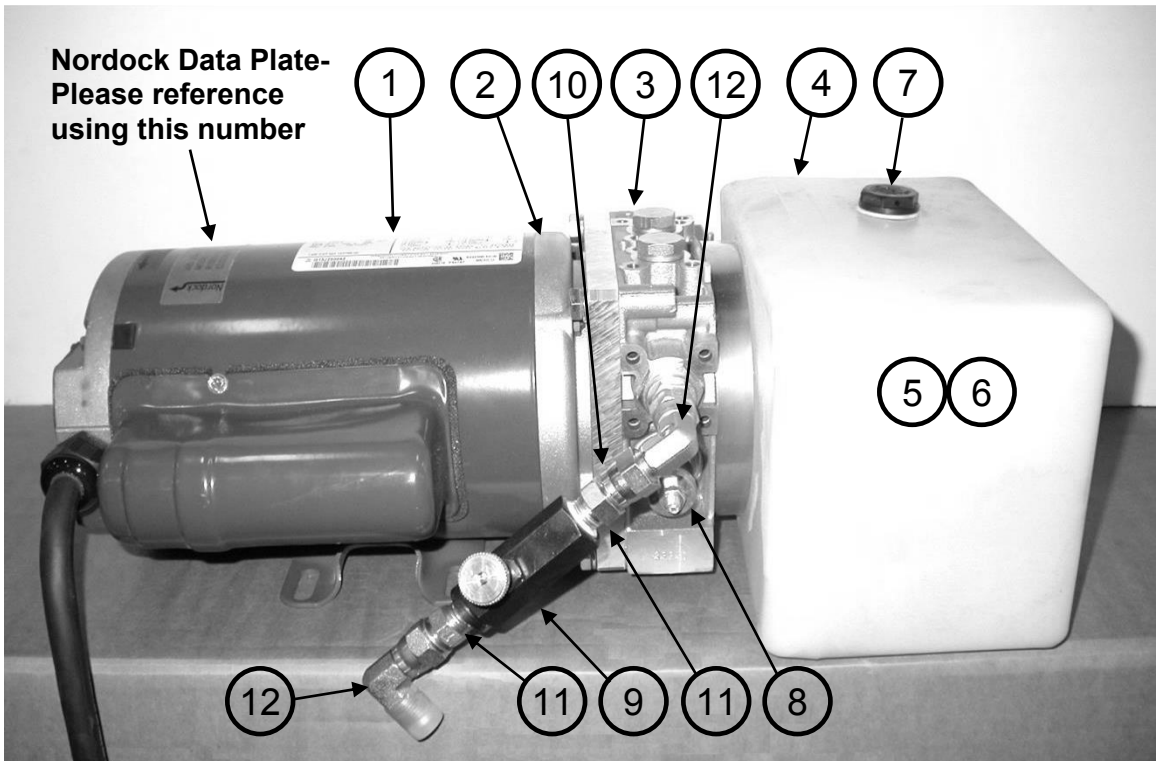

Item	Qty.	Description / Model		P/N	Note
		Complete Power Pack Assembly (Pts 1-11 below)	115 / 230 V 1 Ph. 208 / 230 / 460 V 3 Ph. 575 V 3 Ph.	13-3447 13-3448 13-3449	
Power Pack Components:					
1	1	Drive Motor	115 / 230 v. 1 PH 230 / 460 v. 3 PH 575 v. 3 Ph		1
2	1	Motor Coupler	Standard Duty		
3	1	Manifold Assembly	Standard Duty		
4	1	Hydraulic Oil Reservoir Kit		13-3598	
5	1	Pump Assembly (Inside Tank)			
6	1	Oil Pickup Screen and Tube (Inside Tank)			
7	1	Cap, Filler/ Vent			
8	1	Pressure Relief Valve Cartridge			
9	1	Flow Control Valve, ¼" NPT		13-1020	
10	1	Hydraulic Fitting, 1/4 (4) MNPT x 9/16 (6) FJIC Swivel		13-3518	
11	2	Hydraulic Fitting, 9/16 (6) MJIC x 1/4 (4) MNPT		13-0100	
12	2	Hydraulic Fitting, 90° 9/16 (6) FJIC x 9/16 (6) MJIC		13-0494	

Note 1 – Consult factory when ordering individual power pack components.

Section 5 – Hydraulic Cylinder

Description / Model	P/N	Note
Seal Kit, Dia. 2”	C3-0020	
Cylinder, 2” Bore, 4 3/4” Stroke	C1-0070	

Section 6 – Hydraulic Lines and Fittings

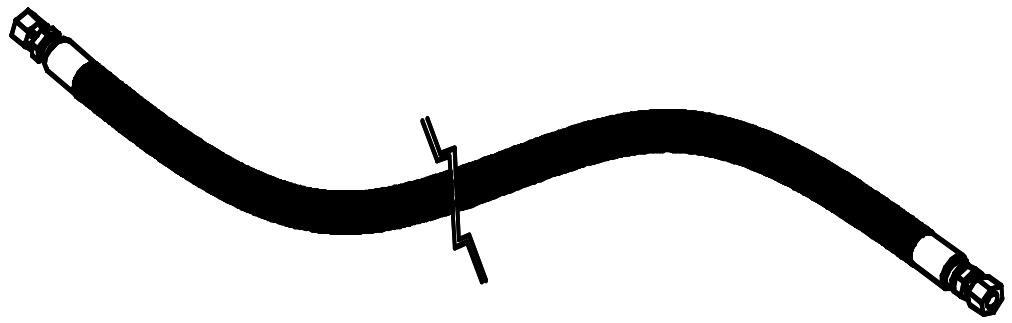

Description / Model	P/N	Note
Deck Lift, 34” long, 1 End Str., 1 End 90°	42-0816	

Section 7 – Bumpers and Boxes

Item	Qty.	Description / Model	P/N	Note
Standard				
1	2	Bumper, Molded 4” x 10”	21-0005	
2	2	Bumper Box, 10” x 14” x 13 ½” long	61-0013	
3	4	Nut, 5/8” NC-11, plated, (for molded bumper only)	13-0289	
4	4	Washer, 5/8” flat, plated, (for molded bumper only)	13-0952	
5	2	Optional Bumper, Laminated, 4 1/2” x 10” long, FF-410-8	61-0027	
Optional 20” Laminated type:				
4	2	Bumper, Laminated, 4 1/2” x 20” long, FF-420-8	61-0042	
5	2	Bumper Box, 10” x 14” x 20 ½” long	61-0096	
Optional 20” Steel Face or Spring type:				
6	2	Steel Spring Bumper, L and R	61-0012	
7	2	Steel Face Bumper, 5” x 20” long, FFS-520-8	61-0069	
8	2	Bumper Box, 10” x 13” x 20 ½” long	61-0125	

Section 8 – Control Panels

Volts	Phase	Description / Style	Control Panel	Wiring Diagram	Note
115	1	Standard Panel / Single Pushbutton	13-3767	48-0063	
208/230	1	Standard Panel / Single Pushbutton	13-3768	48-0063	
208/230	3	Standard Panel / Single Pushbutton	13-3769	48-0062	
460	3	Standard Panel / Single Pushbutton	13-3770	48-0062	
575	3	Standard Panel / Single Pushbutton	13-3771	48-0062	

NORDOCK®



NOTE: 60K Unit shown with
Steel Face Bumpers & Boxes

Hydraulic Dock Leveler
Edge Mount Series
Model (EFH)
40,000 lbs. Capacity

Parts Manual

This manual applies to dock levelers manufactured on or after 2015/04/20,
with Serial Number(s) 31954 and greater.

P/N: 49-0287

NORDOCK INC.

Website: nordockinc.com ~ Email: sales@nordockinc.com ~ Toll free: 866-885-4276

Nordock Inc. reserves the right to make changes to specification Nordock Inc. reserves the right to make changes to specifications without notice or obligation. Nordock products may be covered by various U.S. and foreign patents or pending applications.

Parts and Service Tables

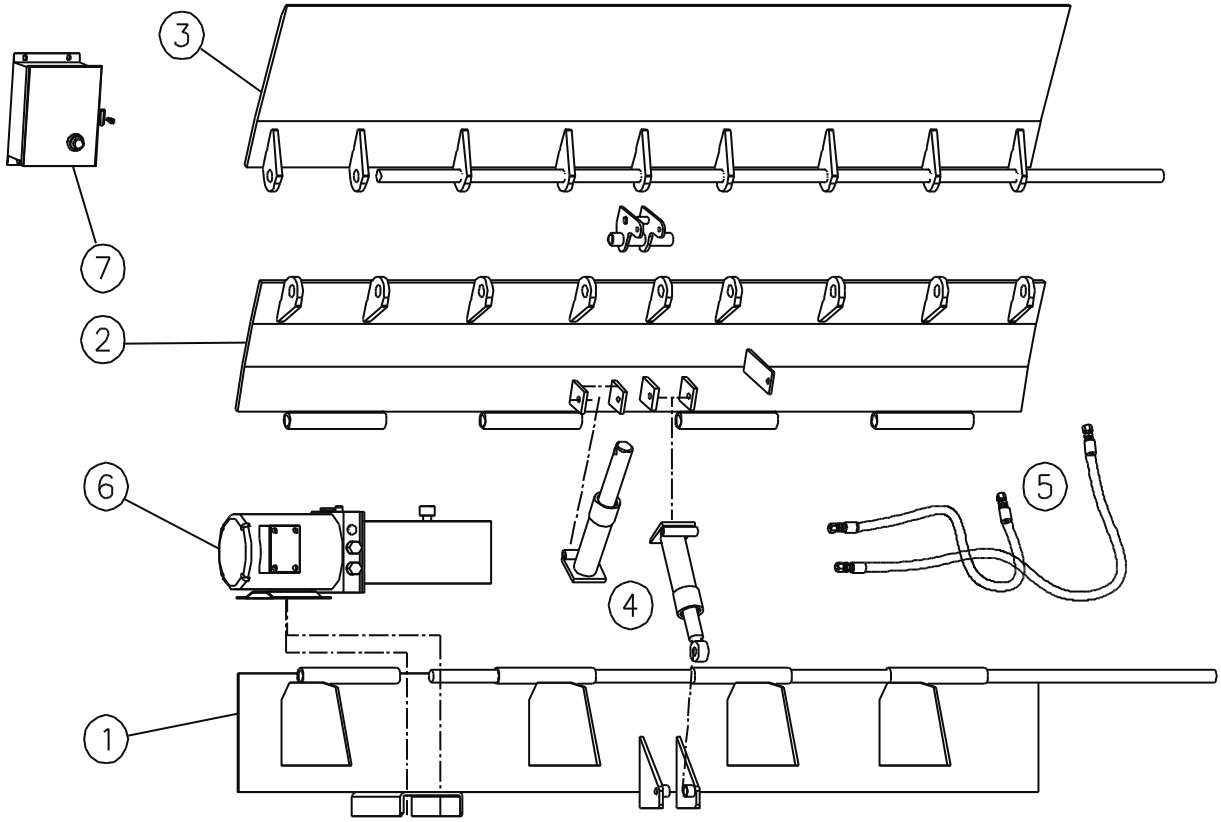

Item Number/ Section	**Description**
1	Back Plate Assembly
2	Deck Assembly
3	Lip Assembly
4	Cylinders
5	Hydraulic Hoses
6	Hydraulic Power Unit
7	Control Panels

Note: Not all parts and weldments are noted in this manual. Only those that are serviceable and /or replaceable will be listed. For additional information on those parts not included in this manual, please contact Nordock. Remember to make note of the model and serial number of the unit for accurate parts and service.

Section 1 – Back Plate Assembly

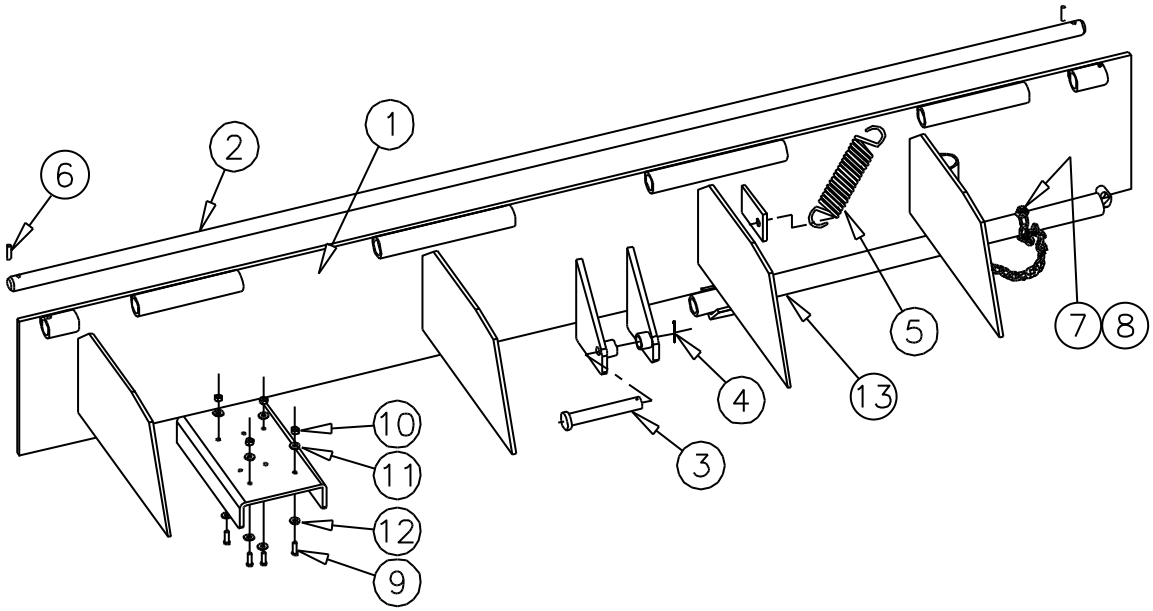

Item	Qty.	Description / Model		P/N	Note
1	1	Back Plate Weldment 40K WL	66” 72” 78” 83”	42-3925 42-3926 42-3927 42-3928	
2	1	Hinge Rod, ø7/8”	66” 72” 78” 83”	43-0302 43-0154 43-0155 43-0156	
3	1	Cylinder Bottom Pin, ¾” x 5 1/4” long		42-2901	
4	1	Cotter Pin, 3/16” x 1 3/4” long		13-0304	
5	1	Spring, 1¾” Dia. x 8” closed		13-0565	
6	2	Spring Pin, ¼” x 2”		13-0555	
7	1	Washer, 1/4" Fender, Steel, Plated		13-0271	
8	1	Screw, 1/4-14 x 1, Tek, Hex Head, Plated		13-0273	
9	4	Bolt, Hex, 1/4" – 20 UNC x 1”		13-0623	
10	4	Nut, 1/4" – 20 UNC, Plated		13-0270	
11	4	Washer, 1/4" SAE Flat		13-0272	
12	4	Washer, 1/4” Lock		13-0335	
13	1	Maintenance Stand		43-1232	

Section 2 – Deck Assembly

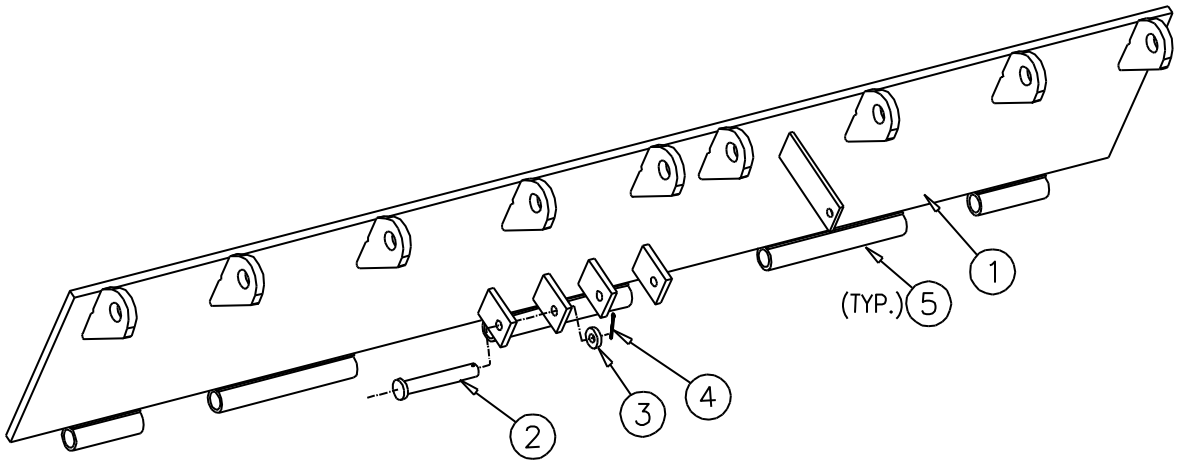

Item	Qty.	Description / Model		P/N	Note
1	1	Deck Weldment, 40K WL	66” 72” 78” 83”	42-3929 42-3930 42-3931 42-3932	
2	2	Pin, Cylinder Mounting, ½” dia. x 4 1/2” long		13-3672	
3	2	Washer, ½”		13-0267	
4	2	Cotter Pin, 1/8” x 1”		13-0171	
5	5	Grease Fitting, 3/16” Drive in		13-0655	

NOTE: Items 2,3 & 4 are for Lip and Lift cylinder mounting

Section 3 – Lip Assembly

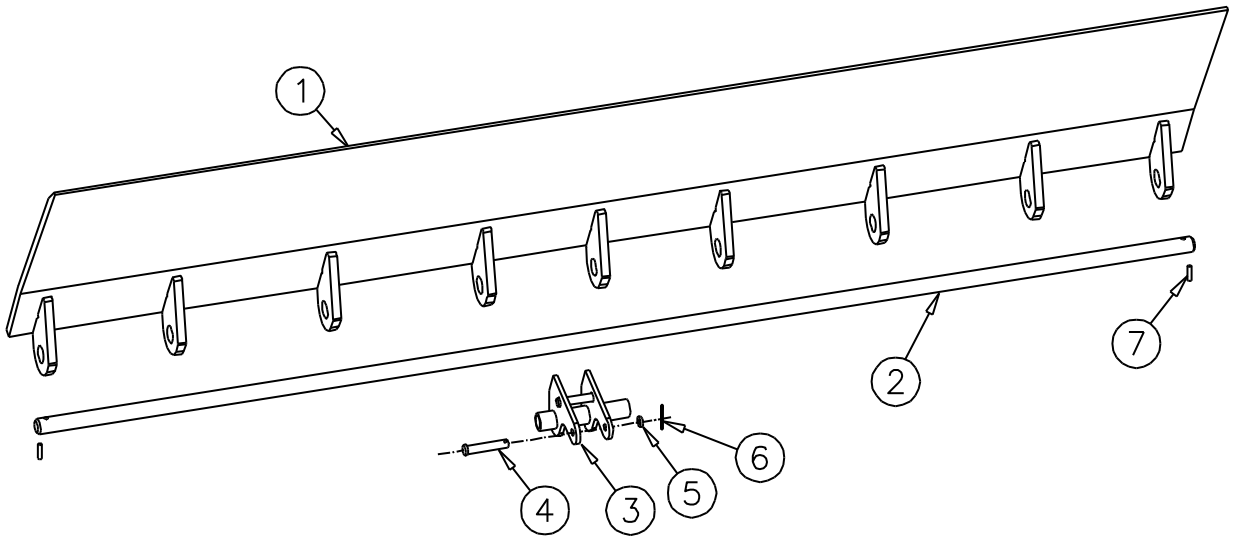

Item	Qty.	Description / Model	P/N		Note
1	1	Lip Weldment, 40K WL,16” long, no bend (flat plate)	66” Wide 72” Wide 78” Wide 83” Wide	42-3934 42-3935 42-3936 42-3937	
		Lip Weldment, 40K WL,16” long, with 6° bend	66” Wide 72” Wide 78” Wide 83” Wide	42-3938 42-3939 42-3940 42-3941	
2	1	Hinge Rod, ø1”	66” Wide 72” Wide 78” Wide 83” Wide	43-0303 43-0148 43-0149 43-0150	
3	1	Lip Cam Weldment, 6 ¾” long, 20-50K		42-0822	
4	1	Clevis pin, 1/2” x 2 1/2” long		13-1099	
5	1	Washer, 1/2” flat		13-0267	
6	1	Cotter Pin, 1/8” x 1” long		13-0171	1
7	2	Spring Pin, ¼”x 2”		13-0555	

Section 4 – Hydraulic Cylinder

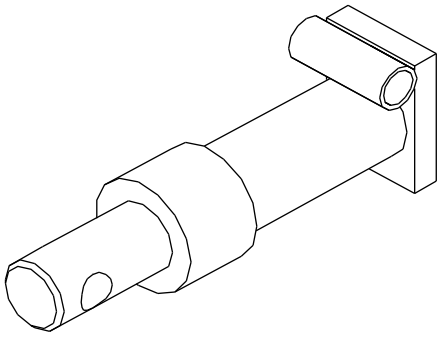

LIP CYLINDER

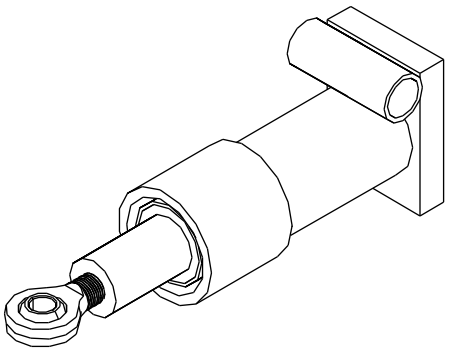

LIFT CYLINDER

Ram Dia.	Length	Description / Model	P/N	Note
1 ½"	All	Seal Kit	C3-0025	
		Bushing, Oilite, 1/2"ID x 5/8" OD x 5/8" Lg	13-1502	
		Grease fitting, 3/16" Drive in	13-0655	
	7 ½" closed	Lip Cylinder, 4 3/4" Stroke	C1-0019	
	8 1/8" closed	Lift Cylinder, 4 3/8" Stoke, with Rod End Bearing	C1-0104	
		Lift Cylinder Bearing, Spherical Rod End, ¾"	13-0567	

Section 5 – Hydraulic Lines and Fittings

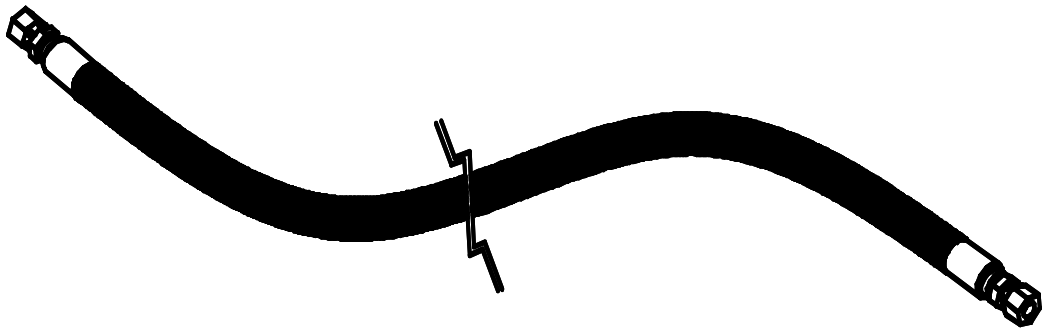

Dock Width	Hose Dia.	Description / Model	P/N	Note
66"	1/4"	Deck Lift, 38" long Lip, 33" long	42-2290 42-2291	
72"	1/4"	Deck Lift, 38" long Lip, 33" long	42-2290 42-2291	
78"	1/4"	Deck Lift, 41" long Lip, 36" long	42-2292 42-2293	
83"	1/4"	Deck Lift, 41" long Lip, 38" long	42-2292 42-2290	
Optional Remote Mount Power Pack, standard length:				
All	3/8"	Deck Lift & Lip, x 20'-0" long (2 -#6 hoses, 2 str. ends)	42-1545	

Note: All hoses, except remote mount, are #4 with #6 FJIC straight ends.

Section 6 - Power Pack and Related Hydraulic Components

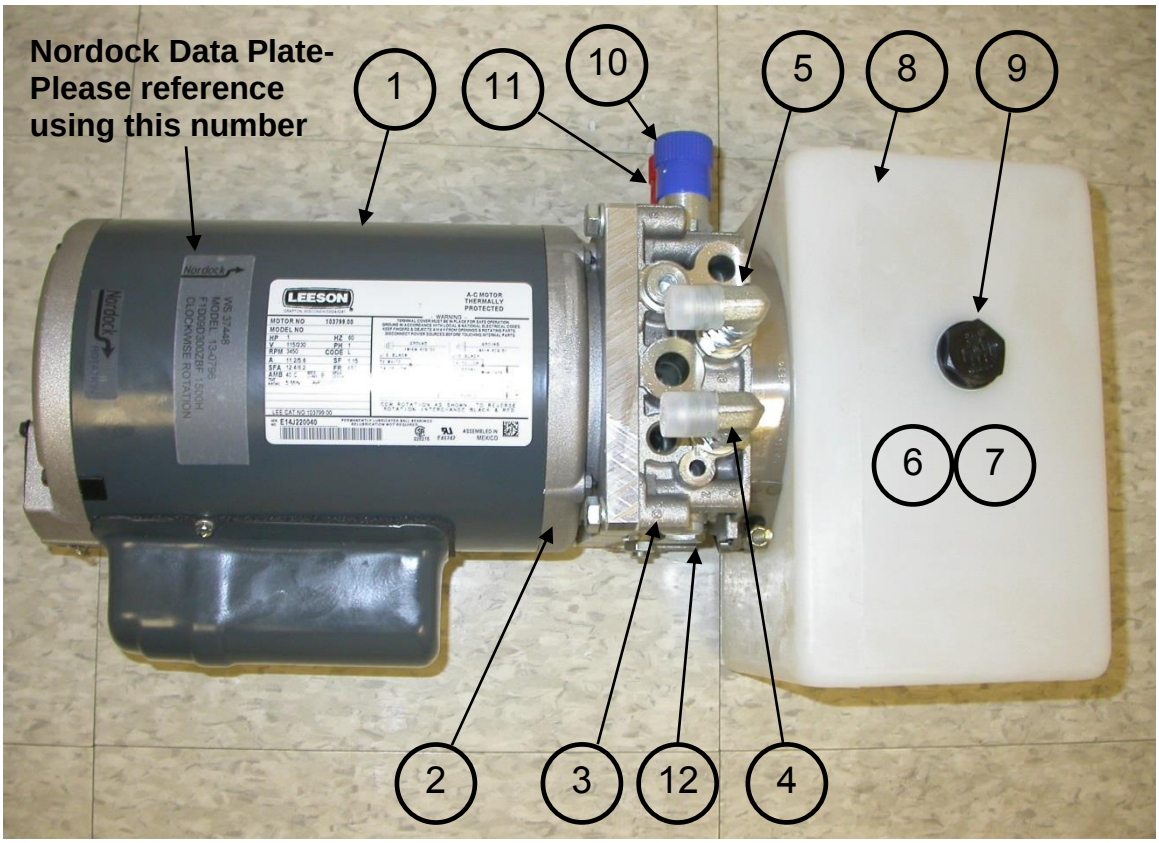

Item	Qty.	Description / Model		P/N	Note
		Complete Power Pack Assembly (Pts 1-12 below)	115 / 230 V 1 Ph 230 / 460 V 3 Ph 575 V 3 Ph	13-0796 13-0797 13-0798	
Power Pack Components:					
1	1	Drive Motor	115 / 230 v. 1 PH 230 / 460 v. 3 PH 575 v. 3 Ph		1
2	1	Motor Coupler	Standard Duty		
3	1	Manifold Assembly	Standard Duty		
4	1	Hydraulic Fitting, 90° 3/8” FNPT x #6MJIC, Deck Lift Port		13-0421	
5	1	Hydraulic Fitting, 90° 3/8” FNPT x #6MJIC, Lip Ext. Port		13-0421	
6	1	Pump Assembly (Inside Tank)			
7	1	Oil Pickup Screen and Tube (Inside Tank)			
8	1	Hydraulic Oil Reservoir		13-3598	
9	1	Filler / Vent Cap			
10	1	Sequence Valve Cartridge		13-2419	
11	1	Pressure Relief Valve Cartridge		13-3332	
12	1	Flow Control Valve		13-3341	
Optional Remote Power Pack Mounting					
13	1	Wall Mount Bracket, not shown		43-0428	

Note 1 – Consult factory when ordering individual power pack components.

Section 7 – Bumpers and Boxes

Item	Qty.	Description / Model	P/N	Note
Optional 20” Steel Face or Spring type:				
1	2	Steel Face Bumper, 6” x 20” long, FFS-620-8 (flat, flat)	61-0004	
2	2	Steel Face Bumper, 6” x 20” long, AFS-620-8 (angle, flat)	61-0046	
3	2	Steel Spring Bumper, L and R	61-0012 61-0140	

Section 8 – Control Panels

Volts	Phase	Description / Style	Control Panel	Wiring Diagram	Note
115	1	Standard Panel / Single Pushbutton	13-3767	48-0063	
208/230	1	Standard Panel / Single Pushbutton	13-3768	48-0063	
208/230	3	Standard Panel / Single Pushbutton	13-3769	48-0062	
460	3	Standard Panel / Single Pushbutton	13-3770	48-0062	
575	3	Standard Panel / Single Pushbutton	13-3771	48-0062	

NORDOCK®



Vertical Storing Hydraulic Dock Leveler
TELESCOPING-LIP™ Model (NVTL)

NVTL 78-40

Parts Manual

This manual applies only to vertical storing dock levelers
with serial numbers in the range of: **70330** through **70341**

Please note: Deck, lip and frame weldment parts can vary based on leveler dimensions and capacity. Please contact us to determine the right part for this leveler.

P/N: 63841-OM

NORDOCK INC.

Website: Nordockinc.com ~ Email: Sales@Nordockinc.com ~ Toll free: 866-885-4276

Nordock Inc. reserves the right to make changes to specifications without notice or obligation. Nordock products may be covered by various U.S. and foreign patents or pending applications.

Assembly Diagram and Parts List

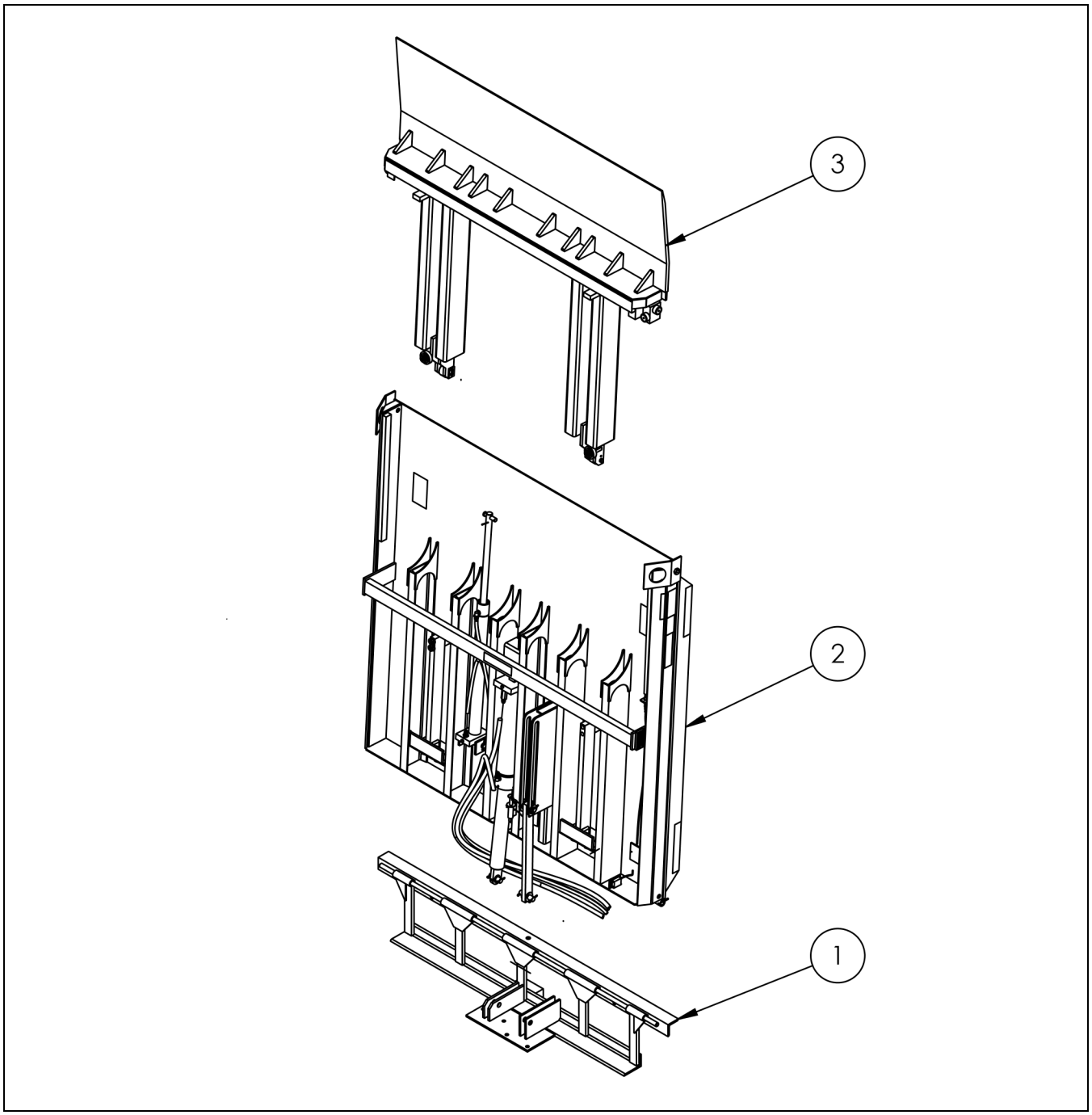

Figure 1: NVTL Dock Leveler Exploded Assembly

Item	Qty	Description/Model	P/N	Note
1	1	Frame Weldment Assembly		
2	1	Deck Weldment Assembly		
3	1	Lip Weldment Assembly		

Dock Assembly

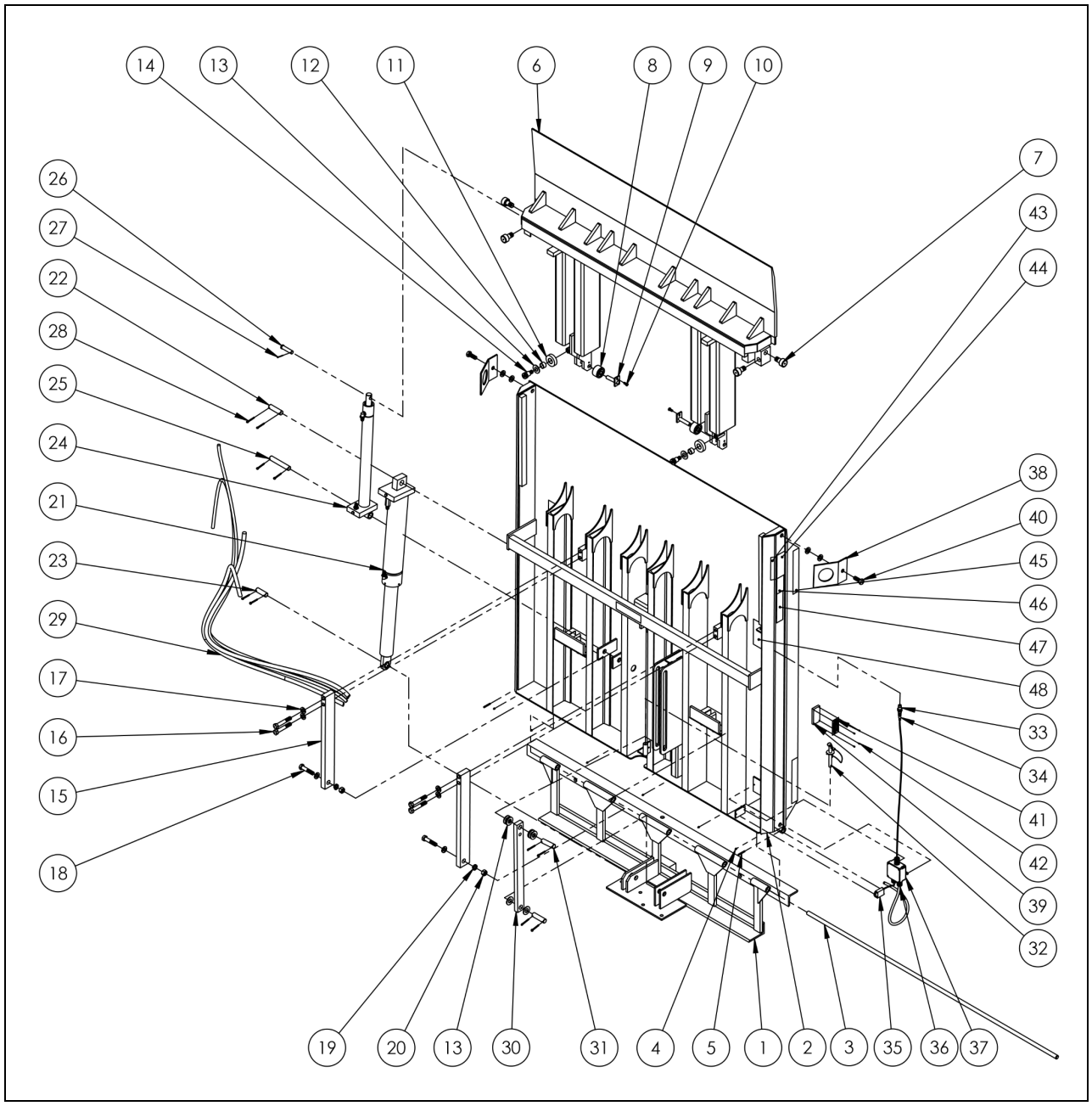

Item	Qty	Description/Model	P/N	Note
1	1	Frame Weldment NVTL 7 ft Wide 15 in Pit	63841-FA1	zinc
2	1	Deck Weldment NVTL 7 x 8 40K	63841-DA	zinc
3	1	Deck Hinge Rod, Rear 7' 25-50K, ST.ST.	43-1371	
4	6	3/16" Drive-in Grease Fitting	13-0655	
5	2	1/4" x 1 1/2" Spring Pin	13-0313	
6	1	Lip Weldment 77.5 in Wide x 20 in Travel	63841-LA	zinc
7	4	Heavy Duty Cam Follower	13-0916	
8	2	Yoke Roller Y80L 2.5" dia	13-2645	
9	2	Lip Roller Pin Weldment TL Series	42-3900	
10	2	3/8"-16 x 3/4" Cap Screw	13-1632	

11	2	Lip Side Roller 2.75" dia	41868-L5	
12	2	1" ID x 1 1/4" OD x 3/4" Long Bushing	13-0417	
13	12	1" SAE Washer	13-2030	
14	2	3/4"-10 Shoulder Screw, 1" Dia x 1" Sh.	13-4581	
15	2	Lower Roller Trap Bar NVTL	41868-D5	
16	4	3/4"-10 x 4 1/2" Cap Screw	13-2651	
17	10	3/4" SAE Washer	13-0649	
18	2	3/4"-10 x 3.5" Bolt	13-1823	
19	2	3/4" Lock Washer	13-1061	
20	2	3/4"-10 UNC Grade 5 Hex Nut	13-1043	
21	1	Main Cylinder Assembly NVTL	37498-CYL	
22	1	Main Cylinder Base Pin	43-2515	
23	1	Main Cylinder Ram Pin	43-1162	
24	1	Lip Cylinder Assembly NVTL	36091-CYL2	
25	1	Lip Cylinder Base Pin	43-2513	
26	1	3/4" x 2.5" Clevis Pin	13-0849	
27	1	1/8" x 1 1/2" Cotter Pin	13-0397	
28	10	1/4" x 1 3/4" Cotter Pin	13-0992	
29	1	Hydraulic Hose Kit	55484-HA	
30	1	Maintenance Strut	41868-MS	
31	2	Maintenance Rod Guide Pin	43-0174	
32	1	Maintenance Pin Assembly	42-3901	
33	1	Proximity Switch	13-3191	
34	1	Proximity Switch Cable	13-3902	
35	1	Position Sensor	13-3299	
36	3	1/2" Strain Relief Fitting (0.236" to 0.472")	13-0419	
37	1	4 x 4 PVC Junction Box	13-2145	
38	2	Lifting Hook	13-0054	
39	1	Serial Number Mounting Plate	43-1341	
40	2	3/4"-10 x 2" Grade 5 Bolt	13-1327	
41	1	Serial Number Metal Label	13-3471	
42	4	#4 x 3/8" U-Drive Screw	13-3678	
43	2	Nordock Logo	13-0043	
44	2	Caution Label	13-0296	
45	8	Black and Yellow Striped Label	13-0045	
46	2	Patents and Trademarks Label	13-2171-F	
47	3	Crush Warning Label, 2 x 8	13-4222	
48	2	Crush Warning Label, 4 x 7	13-4223	

Stanchion Assembly for Controls and Power Units

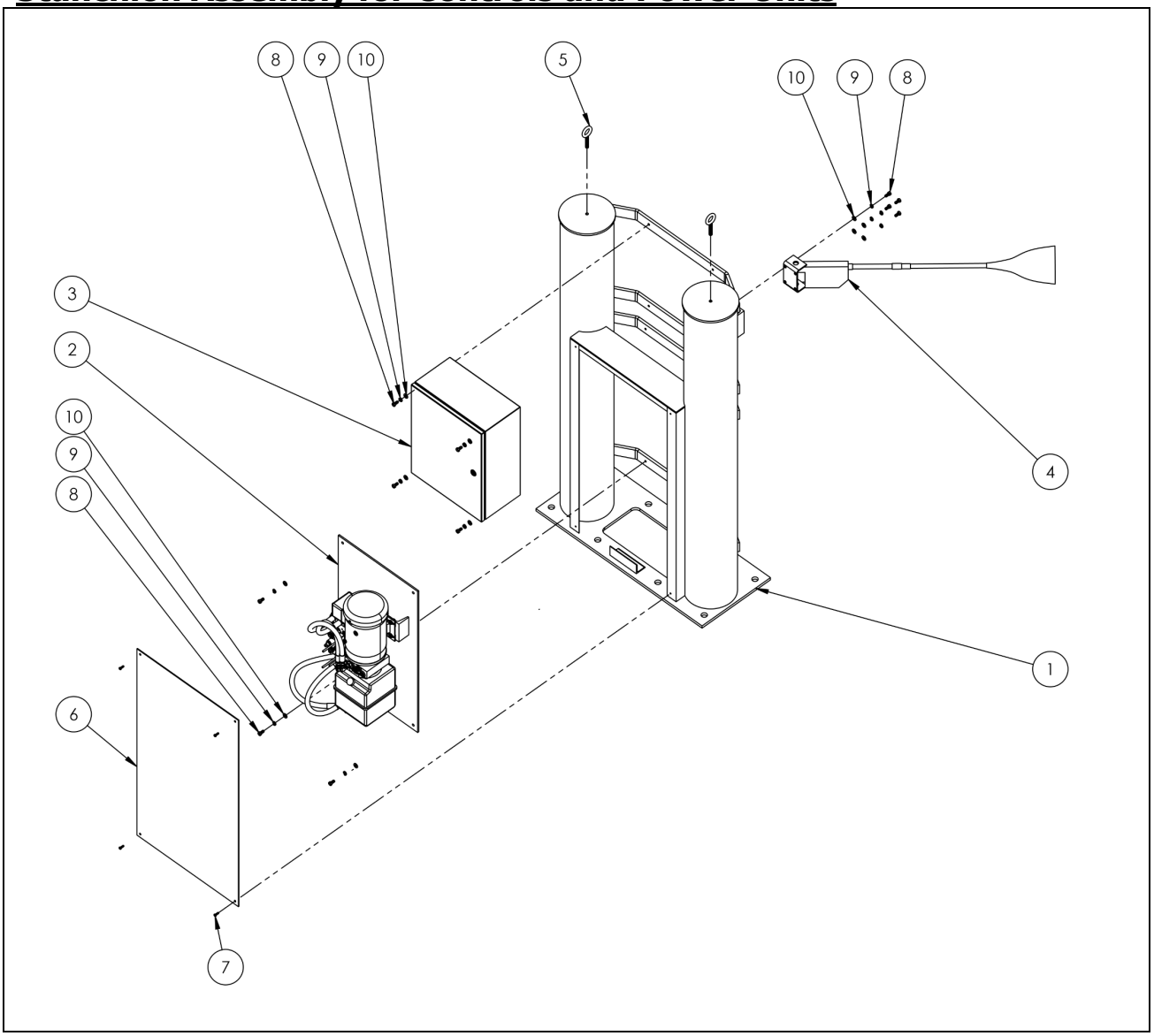

Item	Qty	Description/Model	P/N	Note
1	1	Stanchion Weldment	64192-ST	yellow
2	1	NVTL HPU Sub-Assembly		
3	1	Control Panel	58-5425	
4	N/A	60W LED Dock Light	N/A	
5	2	1/2"-13 x 3-1/2" Eyebolt	13-6626	
6	N/A	Stanchion Cover Plate	N/A	
7	N/A	1/4"-20 Cover Plate Bolt	13-5009	
8	8	3/8"-16 x 3/4" Hex Bolt	13-1632	
9	8	3/8" Lock Washer	13-0767	
10	8	3/8" SAE Flat Washer	13-0203	

Hydraulic Power Unit

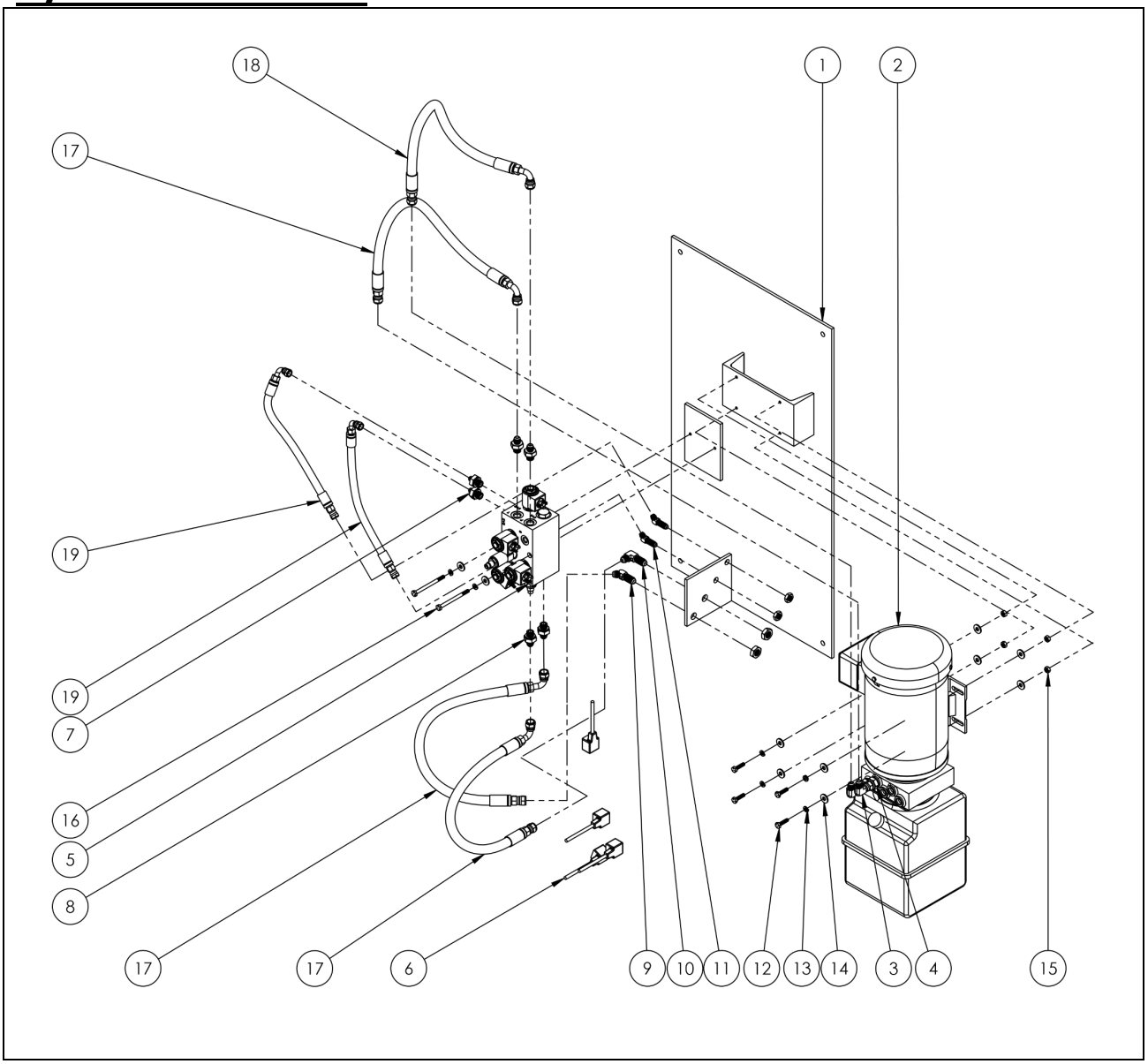

Item	Qty	Description/Model	P/N	Note
1	1	Power Unit Mounting Plate Weldment	41868-MP	
2	1	1.5HP Vertical Mount Power Pack	13-4167	
3	2	#6 MJIC to #6 FJIC 90 Deg Elbow with Swivel (N.B. supplied with 13-4167 above)	13-0494	
4	2	3/8" MBSPP to #6 MJIC Adapter (N.B. supplied with 13-4167 above)	13-3091	
5	1	NVTL Manifold with 24VDC Coils	47-0028	
6	1	Solenoid Deutch Connector and Wire	13-7130	
7	2	#4 MJIC to #6 MORB Adapter	13-1845	
8	4	#6 MJIC to #6 MORB Adapter	13-0609	
9	1	#6 MJIC to #6 MJIC 45 deg Bulkhead Adapter	13-2754	
10	1	#6 MJIC to #6 MJIC 90 deg Bulkhead Adapter	13-2753	
11	2	#4 MJIC to #4 MJIC 45 deg Bulkhead Adapter	13-1170	

12	4	1/4-20 x 1" Hex Head Cap Screw	13-0623	
13	6	1/4" Lock Washer	13-0335	
14	10	1/4" Flat Washer	13-0272	
15	4	1/4-20 Hex Nut	13-0334	
16	2	1/4-20 x 3 1/4" Hex Head Cap Screw	13-3611	
17	3	#6 x 18" Hose with #6 FJIC Straight and 90 deg Ends	13-4190	
18	1	#6 x 17" Hose with #6 FJIC Straight and 90 deg Ends	13-4191	
19	2	#4 x 11 1/2" Hose with #4 FJIC Straight and 90 deg Ends	13-4188	

NORDOCK®



SMART-HOOK® SERIES
AR-10K

Rotating Hook
Vehicle Restraint

Parts Manual

This manual applies to model AR-10K restraints manufactured beginning Feb 2018
with serial numbers 41523 and greater (with IP-66 motors)

P/N 59-0052 rev F

NORDOCK INC.
Website: nordockinc.com ~ Email: sales@nordockinc.com ~ Toll free: 866-885-4276

Nordock Inc. reserves the right to make changes to specifications without notice or obligation. Nordock products may be covered by various U.S. and foreign patents or pending applications.

Parts List

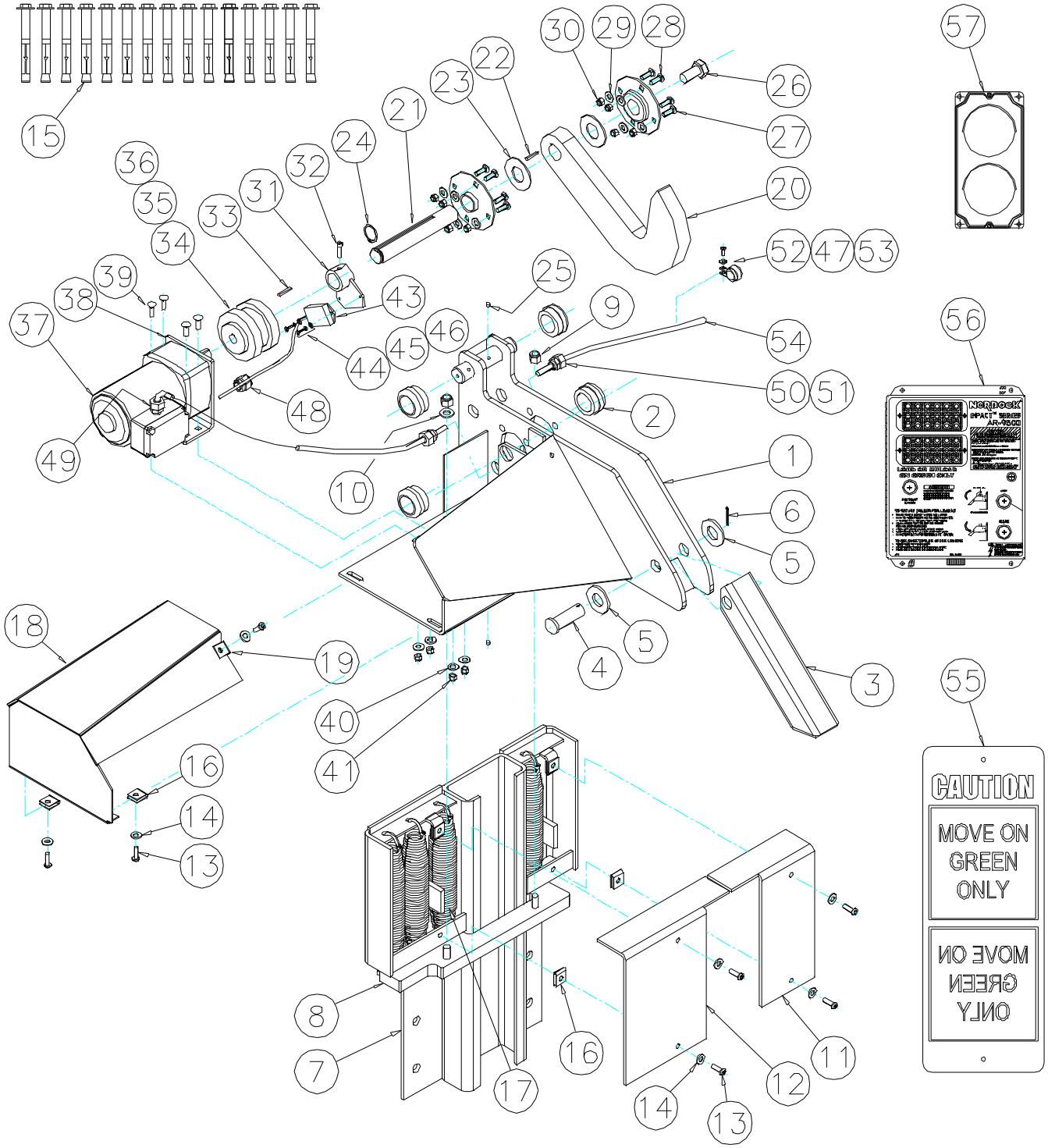

Item	Qty	Description / Model	P/N	Note
1	1	Carriage Weldment	52-1053	
2	4	Roller, Carriage (w/ bearing)	52-1014	

Item	Qty	Description / Model	P/N	Note
3	1	Slope Extension Weldment	52-1013	
4	1	Clevis Pin, 1" x 4" Steel, Non Plated	13-2658	
5	2	Washer, 1", Flat, Steel, Plated, SAE	13-2030	
6	1	Cotter Pin, 3/16" x 1-3/4", Steel, Plated	13-0304	
7	1	Backplate Weldment	52-1006	
8	1	Spring Bar	52-1019	
9	2	Nut, 1/2" Nylock	13-0750	
10	1	Washer, 1/2" flat, Plated	13-0267	
11	1	Spring Cover, Right	53-1088	
12	1	Spring Cover, Left	53-1089	
13	7	Cap Screw, Button Hd, 5/16”-18 x 1", plated	13-2684	
14	7	Washer, 5/16", plated	13-0946	
15	15	Anchor, Sleeve, Bolt Head, 5/8 x 5, plated	13-2660	
16	6	Nut Retainer, Clip -on, J-Type, 5/16-18	53-1103	
17	4	Spring	53-1001	
18	1	Motor Cover	52-1010	
19	1	Nut Retainer, Clip -on J-Type, 5/16-18	13-2446	
20	1	Hook Weldment	52-1015	
21	1	Hook Shaft, 1 1/4" diameter	53-1102	
22	1	Keybar, 1/4" x 1-1/4" long	13-0752	
23	2	Washer, 1-1/4", plated	13-1527	
24	1	Retaining Ring, External, 1-1/4”	13-2731	
25	2	Grease Fitting, 1/4" Straight	13-2785	
26	1	Bolt, Hex Hd, 5/8"NC x 1"	13-2740	
27	2	Bearing, 4-Bolt Flange, 1-1/4"	13-2372	
28	8	Bolt, Carriage, 3/8" x 1"	13-2661	
29	8	Washer, 3/8" flat plated	13-0968	
30	8	Nut, 3/8-16 Nylock Jam, plated	13-1331	
31	1	Position Sensor Mounting Bracket	52-1054	
32	1	SHCS, ¼-28 x 1”, ZP	13-2066	
33	1	Keybar, 1/4" x 1-1/2" long	13-0752	
34	1	Coupling, Flex, Flange 3/4" Bore	13-2377	
35	1	Coupling, Flex, Flange 1-1/4" Bore	13-2378	
36	1	Coupling, Flex, Sleeve Size 6	13-2379	
37	1	Gearmotor, 130V DC, IP66 w/ waterproof connector	13-4180	
38	1	Motor Mounting Plate	53-1015	
39	4	Bolt, Carriage, 5/16" x 1"	13-2662	
40	4	Washer, 5/16" plated	13-0624	
41	4	Nut, 5/16 Nylock, plated	13-0846	
43	1	Hook Position Sensor w/ Weatherpak connector	13-4240	
44	2	Screw, 8-32 x 3/4", Combo Head, Plated	13-2722	
45	2	Washer, Lock, Split, #8, ZP	13-3118	
46	2	Washer, Flat, #8, ZP	13-3117	
47	1	Screw, 10-24 x 1/2", Combo Head, Plated	13-0124	
48	1	Connector	NA	
49	1	Connector, 1/2" Thread, Strain Relief, Metal (Mtr)	NA	
50	2	Connector, 3/4" Thread, Strain Relief, Metal (Mtr)	13-2501	
51	2	Connector, Strain Relief, 3/4" Metal (on carriage)	13-3840	
52	1	Strap, Rubber Cable Clamp	13-2786	
53	1	Washer, #10, Plated	13-1956	
54	1	Control Cable, AR-10K, w/ waterproof connectors	53-1097	

Item	Qty	Description / Model	P/N	Note
55	1	Sign, Outside Caution	23-0124	
56	1	Control Panel, AR-10K, 115V	58-1800	
57	1	Outside Traffic Light, LED, Red and Green, 10-32 VDC	13-3282	

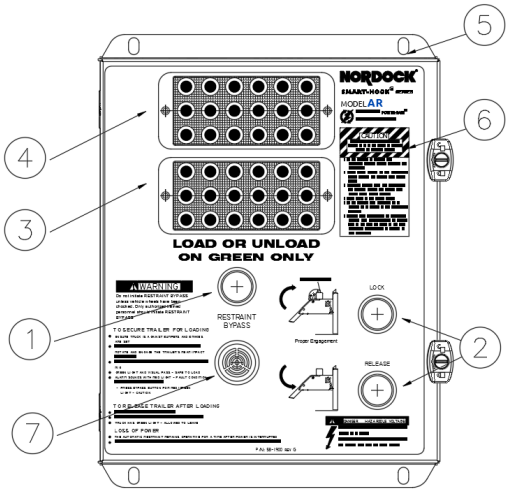

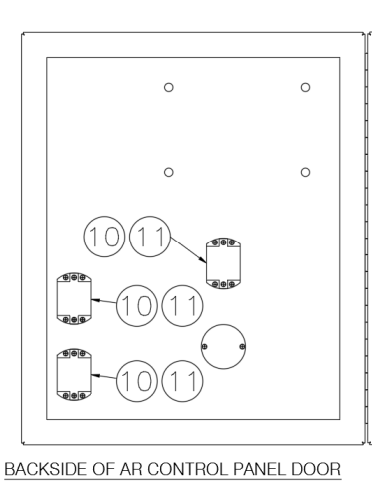

BACKSIDE OF AR CONTROL PANEL DOOR

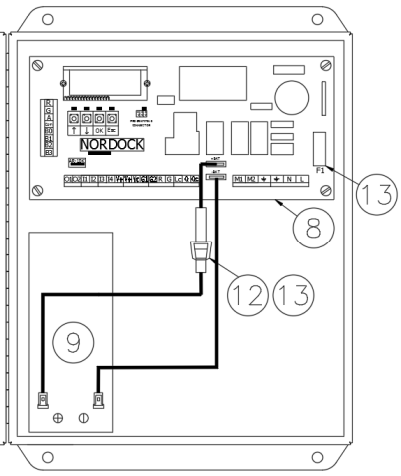

INSIDE AR10K CONTROL PANEL

Item	Qty	Description / Model	P/N	Note
1	1	Pushbutton, Flush Face, Yellow	13-1178	
2	2	Pushbutton, Flush Face, Green	13-1181	
3	1	Light, Marker, Rectangular, LED, Green, 24 VDC	13-3258	
4	1	Light, Marker, Rectangular, LED, Red, 24 VDC	13-3427	
5	1	Enclosure, 12”H x 10”W x 5”D, Steel, Hinged Cover	13-1017	
6	1	Overlay, AR-10K, 12”x10” Enclosure	58-1900	
7	1	Fault Alarm, 24Vdc	13-1239	
8	1	Circuit Board, AR-10K, Revision 10R	13-4984	
9	1	Battery, 12V, 7.5 AH	13-3844	
10	3	Contact Block, N/O, 10A, GREEN	13-2666	
11	3	Collar, Set Screw, Zinc Plated	13-0751	
12	1	In-Line Fuse Holder		
13	2	Fuse, 2A 250V, 22mm x 5mm	13-4128	

NORDOCK®



SMART-HOOK® SERIES
AR-20K

Rotating Hook
Vehicle Restraint

Parts Manual

This manual applies to model AR-20K restraints manufactured beginning June 2019
with serial numbers 46680 and greater

P/N 59-0066 rev A

NORDOCK INC.
Website: nordockinc.com ~ Email: sales@nordockinc.com ~ Toll free: 866-885-4276
Nordock Inc. reserves the right to make changes to specifications without notice or obligation. Nordock products may be covered by various U.S. and foreign patents or pending applications.

Parts List

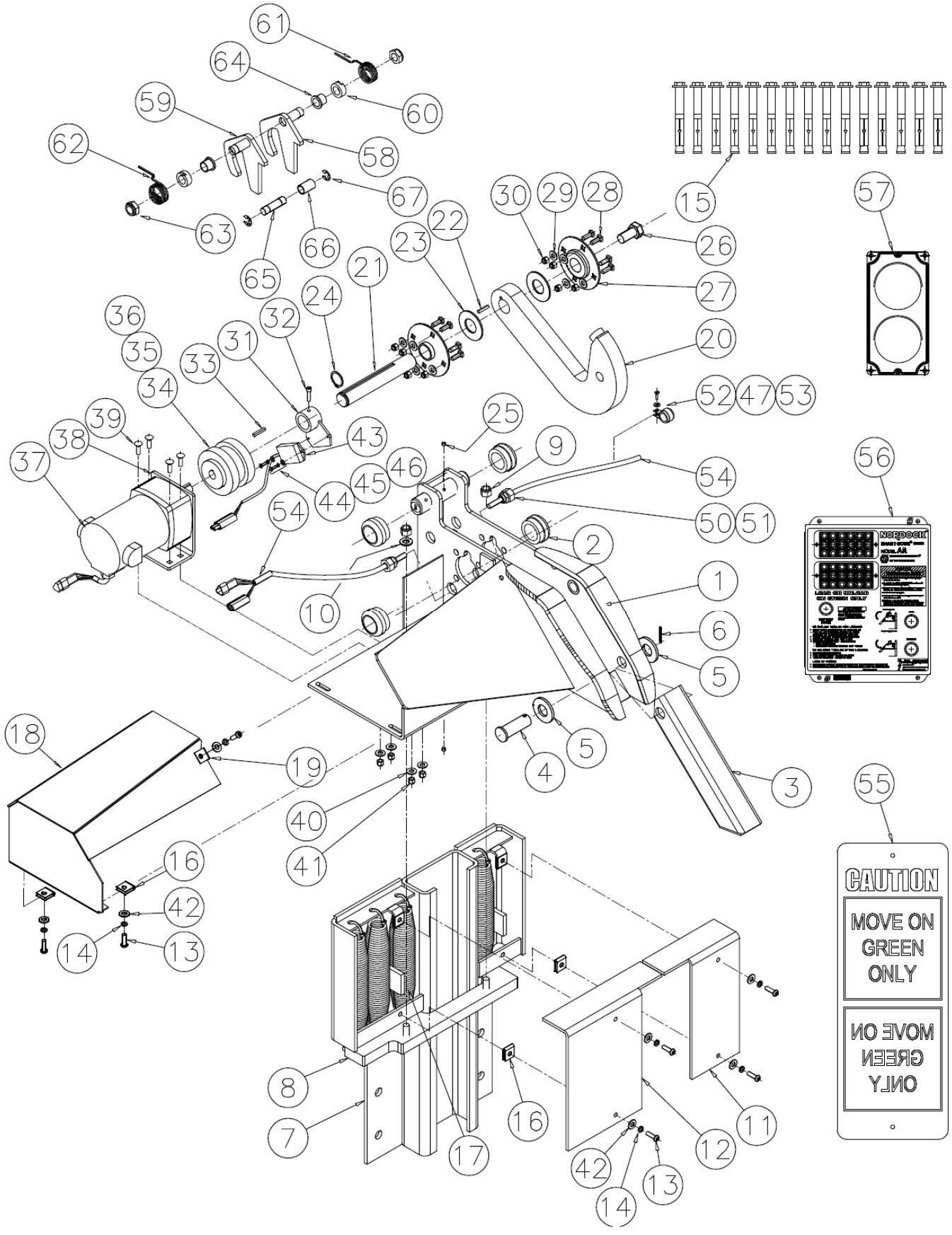

Item	Qty	Description / Model	P/N	Note
1	1	Carriage Weldment	52-1053	
2	4	Roller, Carriage (w/ bearing)	52-1014	
3	1	Slope Extension Weldment	52-1013	
4	1	Clevis Pin, 1" x 4" Steel, Non Plated	13-2658	
5	2	Washer, 1", Flat, Steel, Plated, SAE	13-2030	
6	1	Cotter Pin, 3/16" x 1-3/4", Steel, Plated	13-0304	
7	1	Backplate Weldment	52-1006	
8	1	Spring Bar	52-1019	
9	2	Nut, 1/2" Nylock	13-0750	
10	1	Washer, 1/2" flat, Plated	13-0267	
11	1	Spring Cover, Right	53-1088	
12	1	Spring Cover, Left	53-1089	
13	7	Cap Screw, Button Hd, 5/16”-18 x 1", plated	13-2684	
14	7	Washer, 5/16", Lock, Plated	13-0946	
15	15	Anchor, Sleeve, Bolt Head, 5/8 x 5, plated	13-2660	
16	6	Nut Retainer, Clip -on, J-Type, 5/16-18	53-1103	
17	4	Spring	53-1001	
18	1	Motor Cover	52-1010	
19	1	Nut Retainer, Clip -on J-Type, 5/16-18	13-2446	
20	1	Hook Weldment	52-1015	
21	1	Hook Shaft, 1 1/4" diameter	53-1102	
22	1	Keybar, 1/4" x 1-1/4" long	13-0752	
23	2	Washer, 1-1/4", plated	13-1527	
24	1	Retaining Ring, External, 1-1/4”	13-2731	
25	2	Grease Fitting, 1/4" Straight	13-2785	
26	1	Bolt, Hex Hd, 5/8"NC x 1"	13-2740	
27	2	Bearing, 4-Bolt Flange, 1-1/4"	13-2372	
28	8	Bolt, Carriage, 3/8" x 1"	13-2661	
29	8	Washer, 3/8" flat plated	13-0968	
30	8	Nut, 3/8-16 Nylock Jam, plated	13-1331	
31	1	Position Sensor Mounting Bracket	52-1054	
32	1	SHCS, ¼-28 x 1”, ZP	13-2066	
33	1	Keybar, 1/4" x 1-1/2" long	13-0752	
34	1	Coupling, Flex, Flange 3/4" Bore	13-2377	
35	1	Coupling, Flex, Flange 1-1/4" Bore	13-2378	
36	1	Coupling, Flex, Sleeve Size 6	13-2379	
37	1	Gearmotor, 130V DC, IP66 w/ waterproof connector	13-4180	
38	1	Motor Mounting Plate	53-1015	
39	4	Bolt, Carriage, 5/16" x 1"	13-2662	
40	4	Washer, 5/16" , Flat, Std, plated	13-0624	
41	4	Nut, 5/16 Nylock, plated	13-0846	
42	7	Washer, 5/16" , Flat, SAE, plated	13-3121	
43	1	Hook Position Sensor w/ Weatherpak connector	13-4240	
44	2	Screw, 8-32 x 3/4", Combo Head, Plated	13-2722	
45	2	Washer, Lock, Split, #8, ZP	13-3118	
46	2	Washer, Flat, #8, ZP	13-3117	
47	1	Screw, 10-24 x 1/2", Combo Head, Plated	13-0124	
48				
49				
50	2	Connector, 3/4" Thread, Strain Relief, Metal (Mtr)	13-2501	
51	2	Connector, Strain Relief, 3/4" Metal (on carriage)	13-3840	

Item	Qty	Description / Model	P/N	Note
52	1	Strap, Rubber Cable Clamp	13-2786	
53	1	Washer, #10, Plated	13-1956	
54	1	Control Cable, AR-10/20K, w/ waterproof connectors	53-1097	
55	1	Sign, Outside Caution	23-0124	
56	1	Control Panel, AR-10/20K, 115V	58-1800	
57	1	Outside Traffic Light, LED, Red and Green, 10-32 VDC	13-3282	
58	1	Locking Plate Weldment, Left, AR-20K	52-1062	
59	1	Locking Plate Weldment, Right, AR-20K	52-1063	
60	2	Locking Plate, Spring Arbor, AR-20K	53-1119	
61	1	Lock Plate Spring, RH Wind, AR-20K	53-1251	
62	1	Lock Plate Spring, LH Wind, AR-20K	53-1250	
63	2	Nut, ¾-16 UNF, Jam, Nylock, ZP	13-4300	
64	2	Bushing, Oilite,Flange, ¾"IDx7/8"ODx3/4"LG	13-4326	
65	1	Rotating Pin, AR-20K	53-1121	
66	1	Bushing, Oilite, Sleeve, 5/8"IDx13/16"ODx1-1/4"LG	13-4408	
67	2	Retaining Ring, 5/8", "E-style", ZP	13-4311	

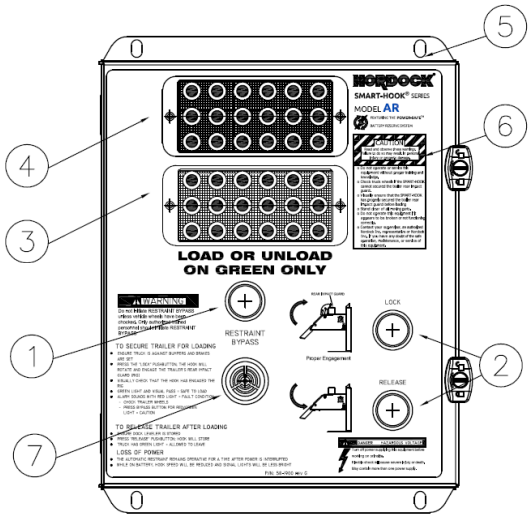

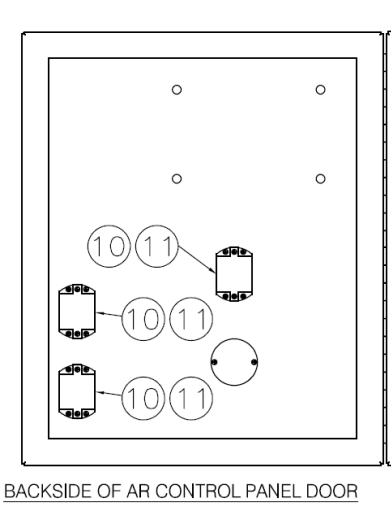

BACKSIDE OF AR CONTROL PANEL DOOR

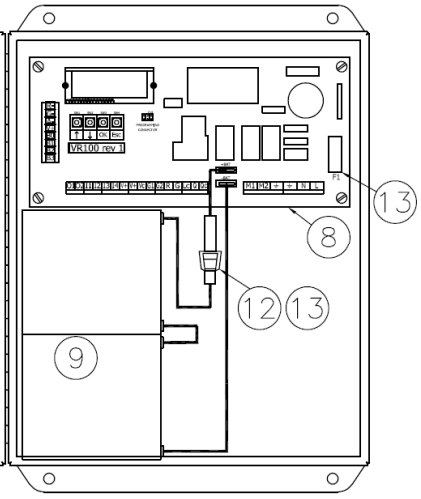

INSIDE AR CONTROL PANEL

Item	Qty	Description / Model	P/N	Note
1	1	Pushbutton, Flush Face, Yellow	13-1178	
2	2	Pushbutton, Flush Face, Green	13-1181	
3	1	Light, Marker, Rectangular, LED, Green, 24 VDC	13-3358	
4	1	Light, Marker, Rectangular, LED, Red, 24 VDC	13-3357	
5	1	Enclosure, 12"H x 10"W x 5"D, Steel, Hinged Cover	C/F	
6	1	Overlay, AR-Series, 12"x10" Enclosure	58-1900	revG
7	1	Fault Alarm, 24Vdc	13-1239	
8	1	Circuit Board, iVR100 Rev 1 – "black"	13-4338	
9	2	Battery, 12V, 5 AH	13-4400	
10	3	Contact Block, N/O, 10A, GREEN	13-2375	
11	3	Mounting collar for contact blocks	C/F	
12	1	In-Line Fuse Holder	C/F	
13	2	Fuse, 2A 250V, 22mm x 5mm	13-4128	

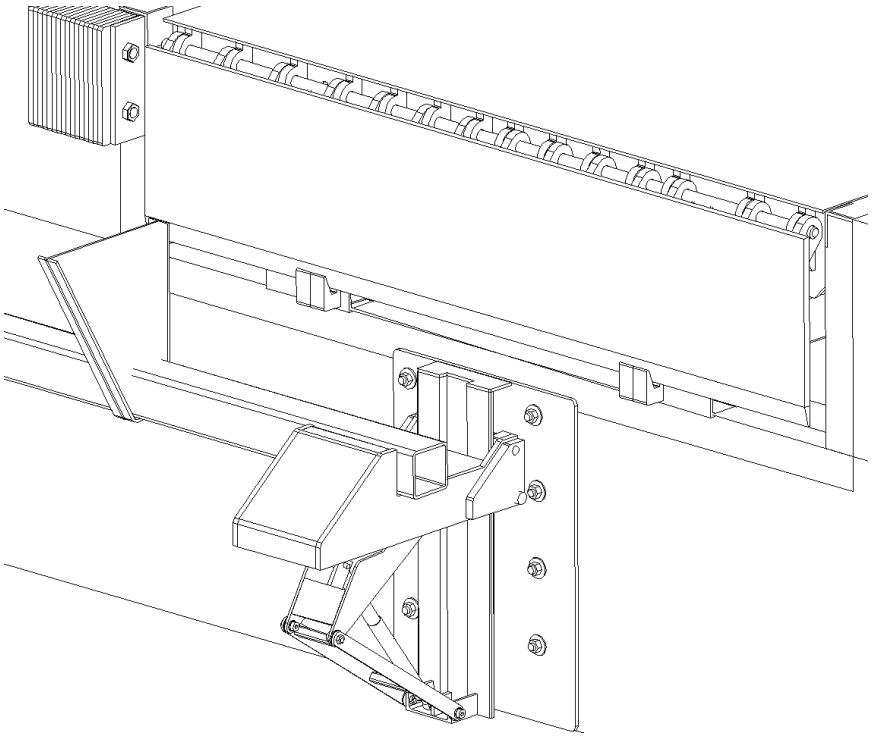

TRUCK-LOCK® SERIES
MTL-100

Low Profile
Vehicle Restraint Manual

Parts Manual

This manual applies to MTL-100 series restraints manufactured after 2013/06/01
With serial numbers 25005 and greater.

P/N: 59-0001 Rev. J

NORDOCK INC.
Website: nordockinc.com ~ Email: sales@nordockinc.com ~ Toll free: 866-885-4276
Nordock Inc. reserves the right to make changes to specifications without notice or obligation. Nordock products may be covered by various U.S. and foreign patents or pending applications.

Parts Replacement

⚠ WARNING

Before servicing this restraint, read and follow the safety practices contained in this manual. Failure to follow the guidelines in this manual and those in effect in the workplace can result in serious bodily harm and equipment damage.

NOTE

The gas spring is partially compressed when the restraint stop plate is installed. To avoid pinching fingers or other body parts, use caution when removing the stop plate.

Removing Hook From Track

If the hook has to be removed to replace damaged or worn parts, the following procedure must be used to avoid personal injury.

1. Store hook.
2. Unscrew retaining bolt from front of track and remove stop plate.
3. Apply weight to the hook and release the latch.
4. Allow the hook to rise slowly to the top of the track.
5. Block up the restraint hook to support its weight when the gas spring is removed.
6. Remove the nut from the 5 1/2 " long bolt and slide the bolt out, also removing the jam nut. Remove bolt completely.

NOTE

The gas spring should come apart easily using only moderate hand pressure. Do not use a pry bar on the rod as it may damage the surface causing premature failure of the gas spring.

7. Once the gas spring is removed, the hook can be lifted out of the track and lowered to the ground in front of the backplate without disconnecting any of the linkages.

Re-installing Hook Into Track

1. Lower hook back into track and block up at a height so that the gas spring may be re-installed easily.
2. Position the cylinder end block between the mounting brackets and insert the 5 ½" long bolt from the left side of arm assembly. Replace the jam nut on the inside of the right tension arm and nylock nut on the outside of the tension arm.
3. Apply weight to hook to lower it into the latched stored position.
4. Re-install stop plate and retaining bolt.

Parts List

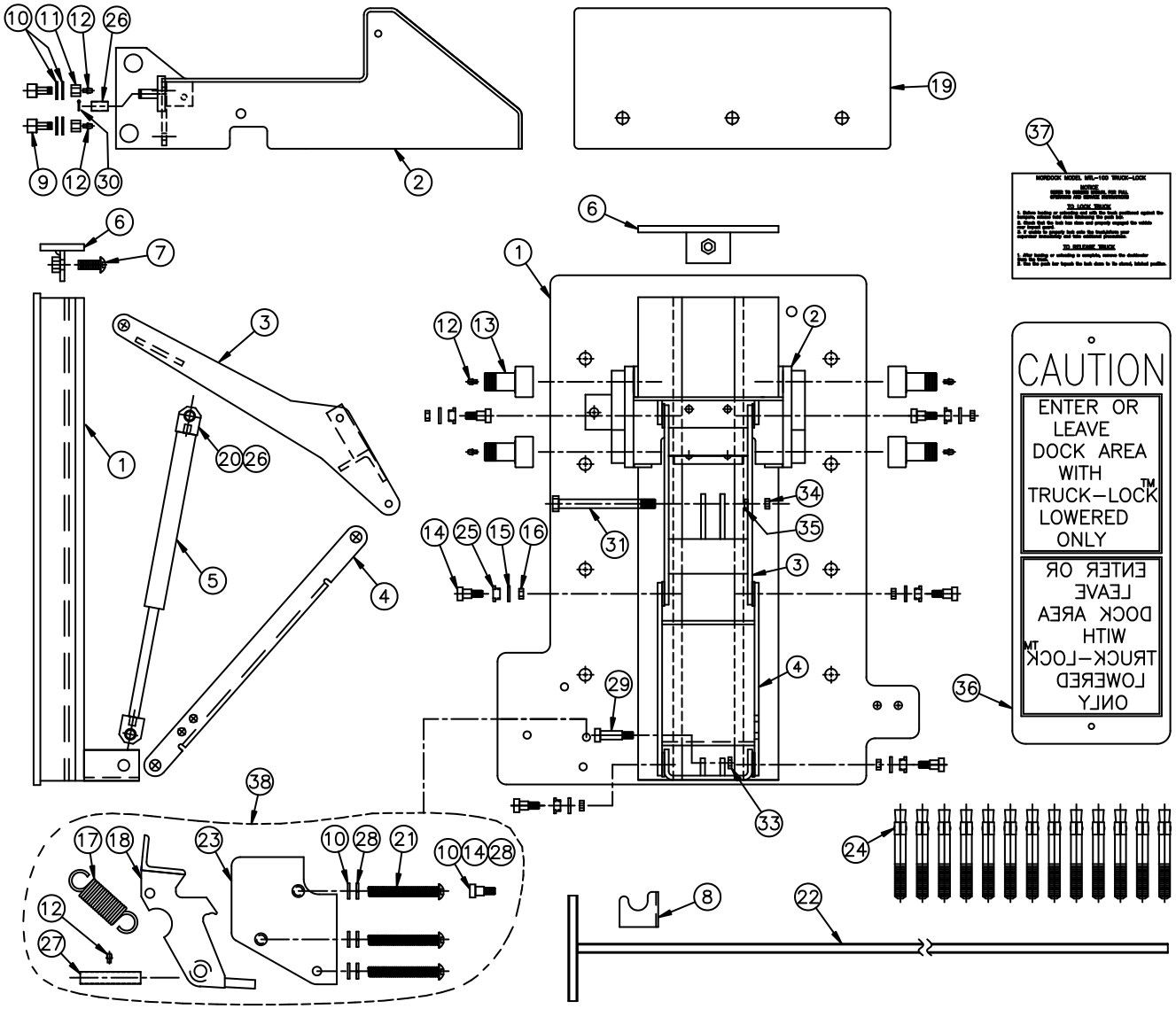

Item	Qty	Description / Model		P/N	Note
1	1	Back Plate Weldment		52-0158	
2	1	Hook Weldment		52-0102	
3	1	Triangle Arm Weldment		52-0157	
4	1	Tension Arm		53-0123	
5	1	Gas Spring, MTL Series Restraint (Rod End Down)	Gas Spring only…… C/w end blocks (Pt 20) and bushings (Pt 26)…	53-0164 52-0166	
6	1	Stop Plate Weldment		52-0106	
7	1	Bolt, Button Head, 1/2” x 1 1/2” Stainless Steel		13-0966	
8	1	Push Bar Hanger Bracket		53-0110	
9	4	Bearing Cam Follower, Ø3/4”		13-0915	
10	12	Washer, 3/8” SAE, ZP		13-0203	
11	4	Nut, 3/8”-24 x1/2” Nylock, ZP		13-0969	
12	9	Grease Fitting, 3/16”, Drive-in		13-0655	

Item	Qty	Description / Model	P/N	Note
13	4	Bearing, Cam Follower, Ø 1-3/4", Heavy Stud	13-0916	
14	7	Bolt, Shoulder, 1/2" x 1/2", ZP	13-0965	
15	6	Washer, Flat, 1/2", STD, ZP	13-0267	
16	6	Nut, Hex, Jam, Nylock 3/8"-16	13-1331	
17	1	Extension Spring, 0.148" Wire, 4-1/2" FL	23-0441	
18	1	Latch Plate Weldment	52-0107	
20	2	Cylinder End Block	C3-0118	
21	3	Bolt, SHCS 3/8 x 4 ¼" long	13-1482	
22	1	Push Bar Weldment	52-0108	
23	1	Latch Cover Plate	53-0181	
24	13	Anchor, Concrete, Wedge, Ø5/8" x 5", ZP	13-0779	
25	6	Bushing, Flange, 1/2" ID x 5/8" OD x 3/8", Oilite	13-0953	
26	3	Bushing, Oilite, 1/2"ID x 5/8"OD x 3/4"Long	13-0963	
27	3	Pipe Spacer, 3/8" Schedule 80	53-0144	
28	4	Washer, 3/8" Lock, Grade 5	13-0767	
29	1	Shoulder Bolt, ½" x 1 ¼" long, 3/8" thread	13-1365	
30	1	Cotter Pin, 1/8" x 1" long	13-0171	
31	1	Bolt, ½" x 5 1/2" long, plated	13-1638	
33	1	Jam Nut, 3/8", plated	13-1021	
34	1	Nut, Nylock, ½", plated	13-0750	
35	1	Jam Nut, ½", plated	13-1639	
36	1	Caution Sign, Outside	53-0127	
37	1	Operating Instruction Placard	53-0126	
38	1	Latch Assembly complete (Pts 10,12,14,17,18,23,27,28)	52-0114	

NORDOCK®

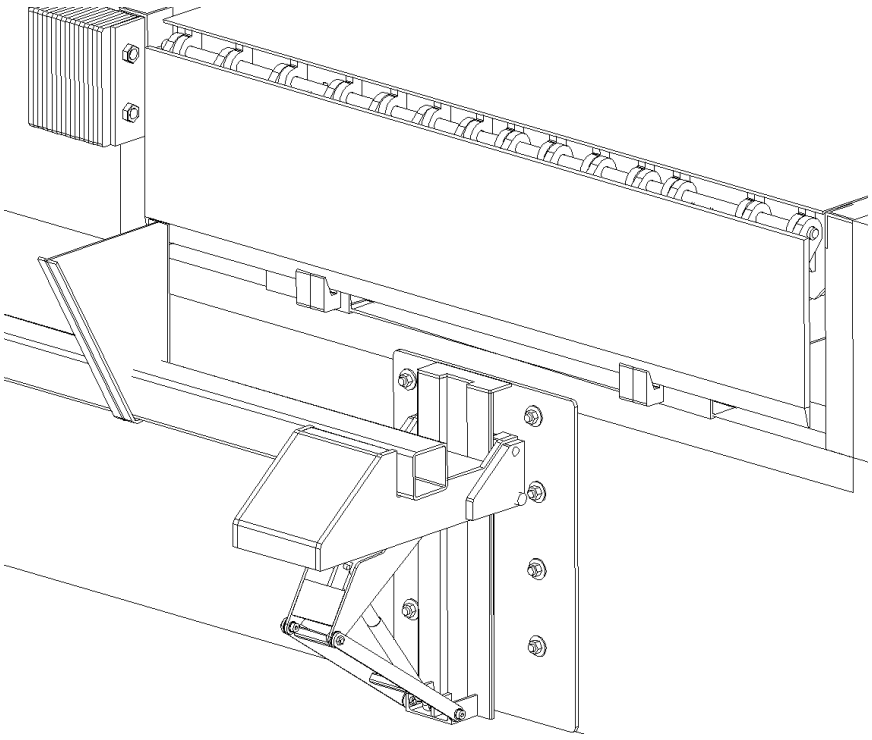

TRUCK-LOCK® SERIES
MTL-200

Low Profile
Vehicle Restraint Manual

Parts Manual

This manual applies to MTL-200 series restraints manufactured after 13/05/03
With serial numbers 25005 and greater.

P/N: 59-0002 Rev. K

NORDOCK INC.
Website: nordockinc.com ~ Email: sales@nordockinc.com ~ Toll free: 866-885-4276
Nordock Inc. reserves the right to make changes to specifications without notice or obligation. Nordock products may be covered by various U.S. and foreign patents or pending applications.

Parts Replacement

⚠ WARNING

Before servicing this restraint, read and follow the safety practices contained in this manual. Failure to follow the guidelines in this manual and those in effect in the workplace can result in serious bodily harm and equipment damage.

NOTE

The gas spring is partially compressed when the restraint stop plate is installed. To avoid pinching fingers or other body parts, use caution when removing the stop plate.

Removing Hook From Track

If the hook has to be removed to replace damaged or worn parts, the following procedure must be used to avoid personal injury.

1. Store hook.
2. Unscrew retaining bolt from front of track and remove stop plate.
3. Apply weight to the hook and release the latch.
4. Allow the hook to rise slowly to the top of the track.
5. Block up the restraint hook to support its weight when the gas spring is removed.
6. Remove the nut from the upper 5 ½" long bolt and slide the bolt out, also removing the jam nut. Remove bolt completely.

NOTE

The gas spring should come apart easily using only moderate hand pressure. Do not use a pry bar on the rod as it may damage the surface causing premature failure of the gas spring.

7. Once the gas spring is removed, the hook can be lifted out of the track and lowered to the ground in front of the backplate without disconnecting any of the linkages.

Re-installing Hook Into Track

1. Lower hook back into track and block up at a height so that the gas spring may be re-installed easily.
2. Position the cylinder end block between the mounting brackets and insert the 5 ½" long bolt from the left side of the assembly. Replace the jam nut on the inside of the tension arm and nylock nut on the outside of the tension arm.
3. Apply weight to hook to lower it into the latched stored position.
4. Re-install stop plate and retaining bolt.

Parts List

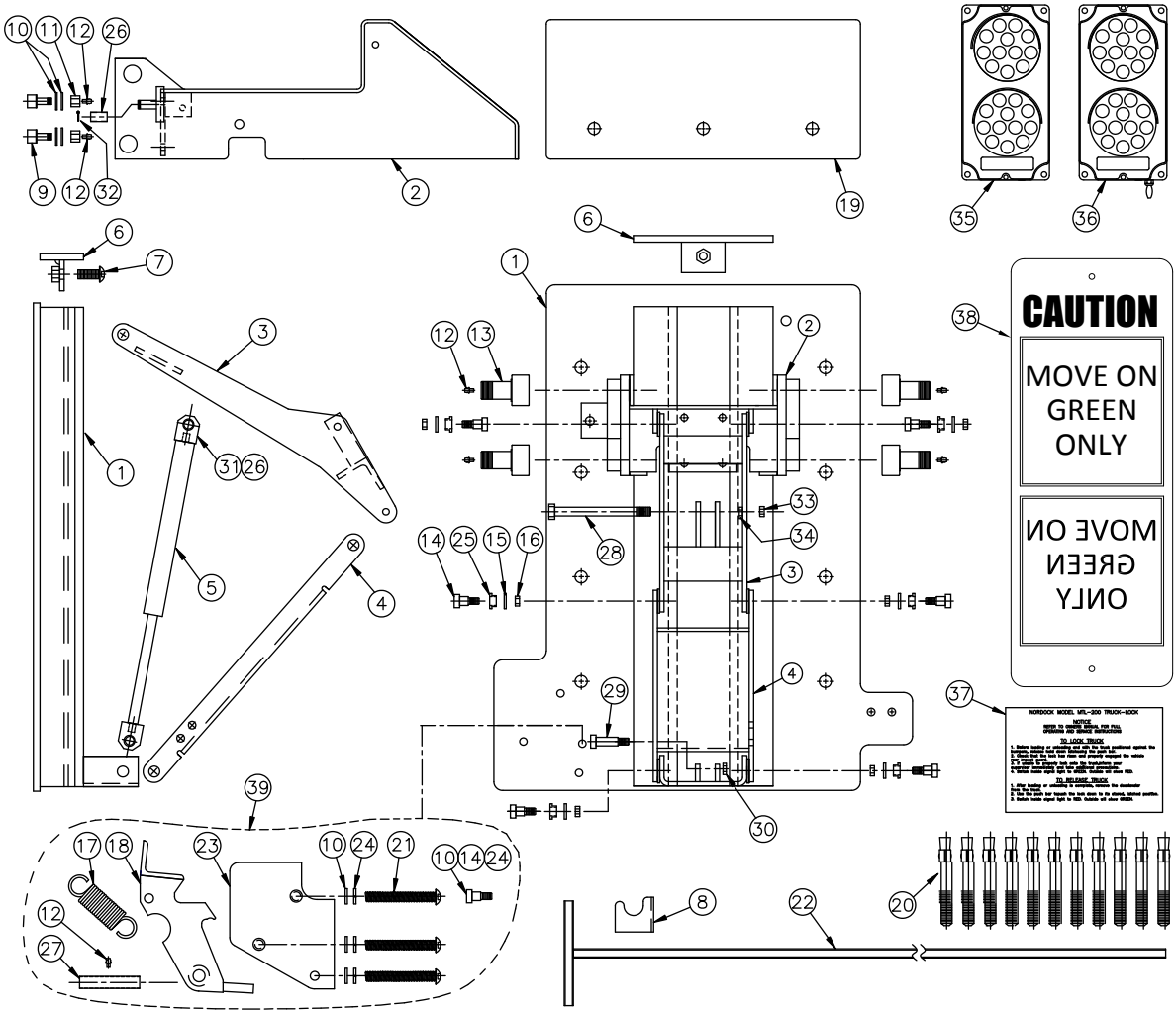

Item	Qty	Description / Model		P/N	Note
1	1	Back Plate Weldment		52-0158	
2	1	Hook Weldment		52-0102	
3	1	Triangle Arm Weldment		52-0157	
4	1	Tension Arm		53-0123	
5	1	Gas Spring, MTL Series Restraint (Rod End Down)	Gas Spring only…….. C/w end blocks (Pt 31) and bushings (Pt 26)…….	53-0164 52-0166	
6	1	Stop Plate Weldment		52-0106	
7	1	Bolt, Button Head, 1/2” x 1 1/2” Stainless Steel		13-0966	
8	1	Push Bar Hanger Bracket		53-0110	
9	4	Bearing Cam Follower, Ø3/4”		13-0915	
10	12	Washer, 3/8” SAE, ZP		13-0203	
11	4	Nut, 3/8”-24 x1/2” Nylock, ZP		13-0969	
12	9	Grease Fitting, 3/16”, Drive-in		13-0655	
13	4	Bearing, Cam Follower, Ø 1-3/4", Heavy Stud		13-0916	

Item	Qty	Description / Model	P/N	Note
14	7	Bolt, Shoulder, 1/2" x 1/2", ZP	13-0965	
15	6	Washer, Flat, 1/2", STD, ZP	13-0267	
16	6	Nut, Hex, Jam, Nylock, 3/8"-16	13-1331	
17	1	Extension Spring, 0.148" Wire, 4-1/2" FL	23-0441	
18	1	Latch Plate Weldment	52-0107	
19	1	Horizontal Shear Plate	53-0108	
20	13	Anchor, Concrete, Wedge, Ø5/8" x 5", ZP	13-0779	
21	3	Bolt, SHCS 3/8 x 4 1/4”, Plated	13-1482	
22	1	Push Bar Weldment	52-0108	
23	2	Latch Cover Plate	53-0181	
24	4	Washer, 3/8” Lock, Grade 5	13-0767	
25	6	Bushing, Flange, 1/2" ID x 5/8" OD x 3/8", Oilite	13-0953	
26	3	Bushing, Oilite, 1/2"ID x 5/8"OD x 3/4"Long	13-0963	
27	3	Pipe Spacer, 3/8" Schedule 80	53-0144	
28	1	Bolt, ½” x 5 1/2” long, plated	13-1638	
29	1	Shoulder Bolt, ½” x 1 1/4” long, 3/8” thread	13-1365	
30	1	Jam Nut, 3/8”	13-1021	
31	2	Cylinder End Block	C3-0118	
32	1	Cotter Pin, 1/8” x 1”	13-0171	
33	1	Nut, Nylock 1/2”	13-0750	
34	1	Jam Nut, 1/2” Plated	13-1639	
35	1	Outside Traffic light, Red and Green, 10-32VDC, LED	13-3282	
36	1	Inside Traffic light, Red and Green, 110V, LED with Switch	13-3577	
37	1	Operating Instruction Placard	53-0132	
38	1	Caution Sign, Outside	23-0124	
39	1	Latch Assembly complete (Pts 10,12,14,17,18,21,23, 24,27)	52-0114	

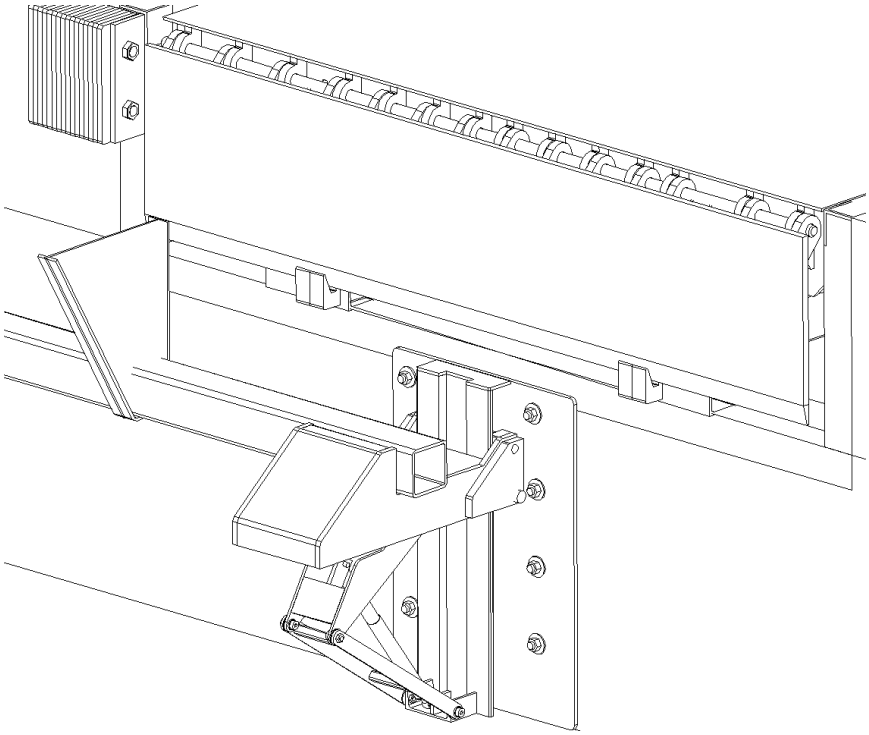

TRUCK-LOCK® SERIES
MTL-250

Low Profile
Vehicle Restraint Manual

Parts Manual

This manual applies to MTL-250 series restraints manufactured
after 2013/06/01 with serial numbers 25005 and greater.

P/N: 59-0008-F

NORDOCK INC.

Website: nordockinc.com ~ Email: sales@nordockinc.com ~ Toll free: 866-885-4276

Nordock Inc. reserves the right to make changes to specifications without notice or obligation. Nordock products may be covered by various U.S. and foreign patents or pending applications.

Parts Replacement

⚠ WARNING

Before servicing this restraint, read and follow the safety practices contained in this manual. Failure to follow the guidelines in this manual and those in effect in the workplace can result in serious bodily harm and equipment damage.

Always replace traffic light bulbs with 28VDC, #2233 bulbs or equivalent. Using 12V automotive bulbs, such as a#1156, will cause damage to the control panel components that will not be covered under warranty.

NOTE

The gas spring is partially compressed when the restraint stop plate is installed. To avoid pinching fingers or other body parts, use caution when removing the stop plate.

Removing Hook From Track

If the hook has to be removed to replace damaged or worn parts, the following procedure must be used to avoid personal injury.

1. Store hook.
2. Unscrew retaining bolt from front of track and remove stop plate.
3. Apply weight to the hook and release the latch.
4. Allow the hook to raise slowly to the top of the track.
5. Block up the restraint hook to support its weight when the gas spring is removed.
6. Remove the upper cylinder bolt and jam nut.

NOTE

The gas spring should come apart easily using only moderate hand pressure. Do not use a pry bar on the rod as it may damage the surface causing premature failure of the gas spring.

7. Once the gas spring is removed, the hook can be lifted out of the track and lowered to the ground in front of the backplate without disconnecting any of the linkages.

Re-installing Hook Into Track

1. Lower hook back into track and block up at a height so that the gas spring may be re-installed easily.
2. Position the cylinder end block between the mounting brackets and insert the 5 ½" long bolt from the left side of the arm assembly. Replace the jam nut on the inside of the right tension arm and nylock nut on the outside of the tension arm.
3. Apply weight to hook to lower it into the latched stored position.
4. Re-install stop plate and retaining bolt.

Parts List

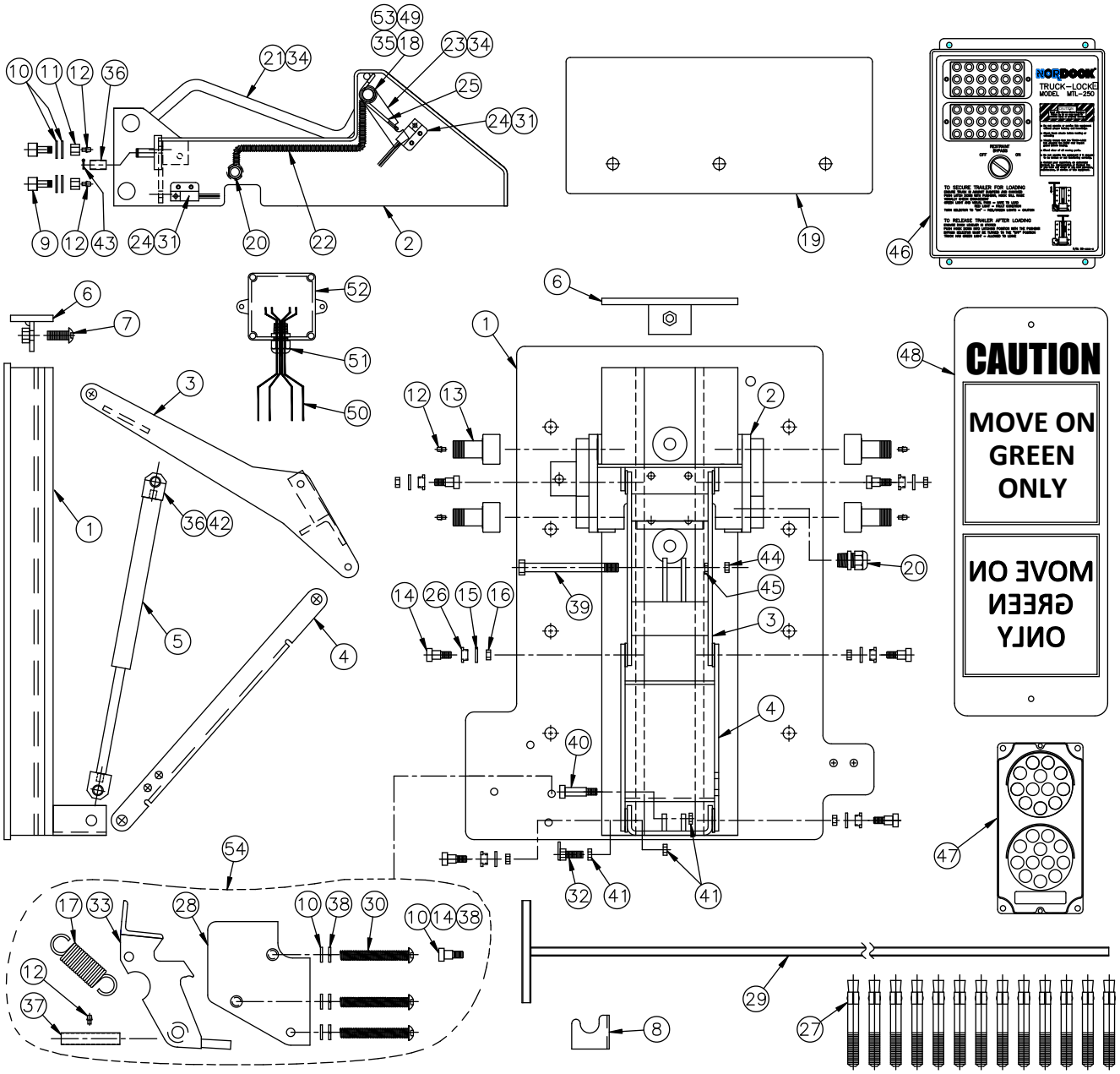

Item	Qty.	Description / Model		P/N	Note
1	1	Back Plate Weldment		52-0158	
2	1	Hook Weldment		52-0102	
3	1	Triangle Arm Weldment		52-0157	
4	1	Tension Arm		53-0123	
5	1	Gas Spring, MTL Series Restraint (Rod End Down)	Gas Spring only…….. C/w end blocks (Pt 42) and Bushings (Pt 36)……..	53-0164 52-0166	
6	1	Stop Plate Weldment		52-0106	
7	1	Bolt, Button Head, 1/2” x 1 1/2” Stainless Steel		13-0966	
8	1	Push Bar Hanger Bracket		53-0110	

Item	Qty.	Description / Model	P/N	Note
9	4.	Bearing Cam Follower, Ø3/4”	13-0915	
10	12	Washer, 3/8” SAE, ZP	13-0203	
11	4	Nut, 3/8”-24 x1/2” Nylock, ZP	13-0969	
12	9	Grease Fitting, 3/16”, Drive-in	13-0655	
13	4	Bearing, Cam Follower, Ø 1-3/4", Heavy Stud	13-0916	
14	7	Bolt, Shoulder, 1/2" x 1/2", ZP	13-0965	
15	6	Washer, Flat, 1/2", STD, ZP	13-0267	
16	6	Nut, Hex, Jam 3/8"-16, Nylock	13-1331	
17	1	Extension Spring, .148" Wire, 4-1/2" FL (Latch)	23-0441	
18	1	Pivot Shaft Sensor Tube	53-0183	
19	1	Horizontal Shear Plate, ZP	53-0108	
20	1	Connector, 1/2" Threaded, Strain Relief, Aluminium	13-1013	
21	1	Sensor Bar Weldment, TL Series Restraint	52-0111	
22	2	Conduit, Flex, 1/4" x 14” long	13-1159-14	
23	1	Sensor Bar Trip Plate, TL Series Restraint	52-0110	
24	2	Proximity Switch, N/O, 18" Wire Leads (P/C FP2000)	13-0985	
25	1	Torsion Sensor Bar Spring	23-0131	
26	6	Bushing, Flange, 1/2" ID x 5/8" OD x 3/8", Oilite	13-0953	
27	13	Anchor, Concrete, Wedge, Ø5/8" x 5", ZP	13-0779	
28	1	Latch Cover Plate	53-0181	
29	1	Push Bar Weldment	52-0108	
30	3	Bolt, SHCS 3/8 x 4 1/4, Plated	13-1482	
31	2	Spacer, Plastic, 0.210” Thick	(c/w 24)	
32	1	Bolt Weldment, 3/8, PRS Sensor	52-0119	
33	1	Latch Weldment	52-0107	
34	2	Socket Head Cap Screw, 1/4"-28 x 1/2" Long	13-1175	
35	3	Wire Ties 8”	S3-0078	
36	3	Bushing, Oilite, 1/2"ID x 5/8"OD x 3/4"Long	13-0963	
37	3	Pipe Spacer, 3/8" Schedule 80	53-0144	
38	4	Lock washer, 3/8", ZP	13-0767	
39	1	Hex Head Bolt, ½” x 5 1/2” long, plated	13-1638	
40	1	Shoulder Bolt, ½” x 1 1/4” long, 3/8” thread	13-1365	
41	3	Jam Nut, 3/8” plated	13-1021	
42	2	Cylinder End Block	C3-0118	
43	1	Cotter Pin, 1/8” x 1” long	13-0171	
44	1	Nut, Nylock ½”	13-0750	
45	1	Jam Nut, ½”	13-1639	
46	1	Control Panel, LED lights	58-0344	
47	1	Outside Traffic Light, Red and Green, LED lights	13-3282	
48	1	Sign, Outside Caution	23-0124	
49	1	Sensor Bar Pivot Shaft	53-0128	
50	1	Cable Sensor, TL Series Restraint	53-0118	
51	1	Connector, ½” Threaded, Strain Relief, Nylon	13-0419	
52	1	Enclosure, Conduit box, 4 x 4 PVC	13-2145	
53	2	Bushing, Flange, 5/8" ID x 3/4" OD x 5/8", Oilite	13-0433	
54	A/R	Latch Assembly complete (Pts 10,12,14,17,28,33,37,38)	52-0114	

NORDOCK®

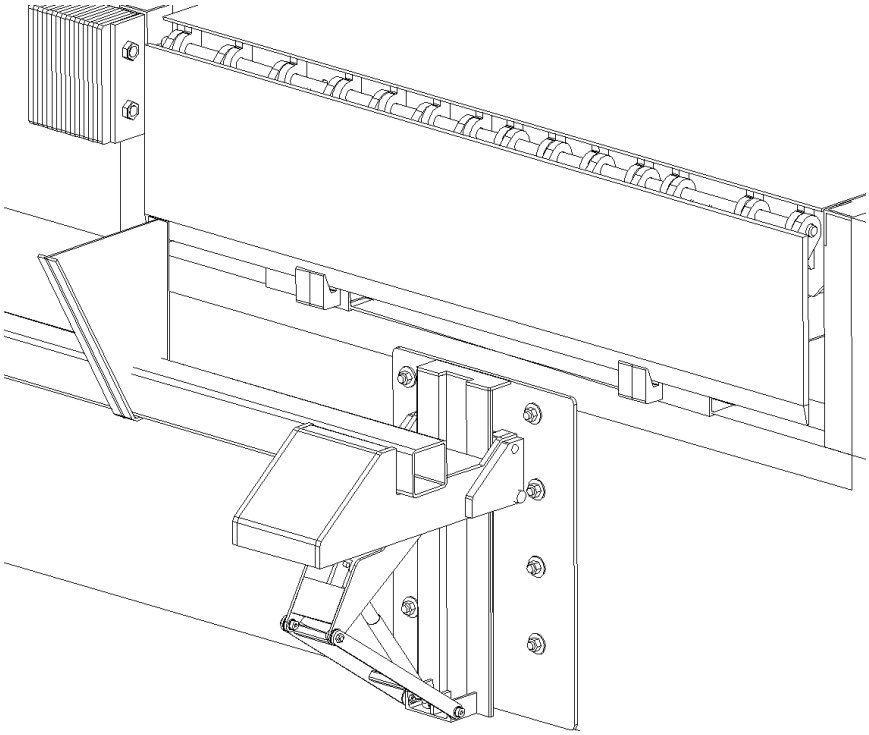

TRUCK-LOCK® SERIES
MTL-300

Low Profile
Vehicle Restraint Manual

Parts Manual

This manual applies to MTL-300 series restraints manufactured after 13/06/01 with serial numbers 25005 and greater.

P/N: 59-0003 Rev K

NORDOCK INC.
Website: nordockinc.com ~ Email: sales@nordockinc.com ~ Toll free: 866-885-4276
Nordock Inc. reserves the right to make changes to specifications without notice or obligation. Nordock products may be covered by various U.S. and foreign patents or pending applications.

Parts Replacement

⚠ WARNING

Before servicing this restraint, read and follow the safety practices contained in this manual. Failure to follow the guidelines in this manual and those in effect in the workplace can result in serious bodily harm and equipment damage.

Always replace traffic light bulbs with 28VDC, #2233 bulbs or equivalent. Using 12V automotive bulbs, such as a#1156 will cause damage to the control panel components that will not be covered under warranty.

NOTE

The gas spring is partially compressed when the restraint stop plate is installed. To avoid pinching fingers or other body parts, use caution when removing the stop plate.

Removing Hook From Track

If the hook has to be removed to replace damaged or worn parts, the following procedure must be used to avoid personal injury.

1. Store hook.
2. Unscrew retaining bolt from front of track and remove stop plate.
3. Apply weight to the hook and release the latch.
4. Allow the hook to raise slowly to the top of the track.
5. Block up the restraint hook to support its weight when the gas spring is removed.
6. Remove the upper cylinder bolt and jam nut.

NOTE

The gas spring should come apart easily using only moderate hand pressure. Do not use a pry bar on the rod as it may damage the surface causing premature failure of the gas spring.

7. Once the gas spring is removed, the hook can be lifted out of the track and lowered to the ground in front of the backplate without disconnecting any of the linkages.

Re-installing Hook Into Track

1. Lower hook back into track and block up at a height so that the gas spring may be re-installed easily.
2. Position the cylinder end block between the mounting brackets and insert the 5 ½” long bolt from the left side of the arm assembly. Replace the jam nut on the inside of the right tension arm and nylock nut on the outside of the tension arm.
3. Apply weight to hook to lower it into the latched stored position.
4. Re-install stop plate and retaining bolt.

Parts List

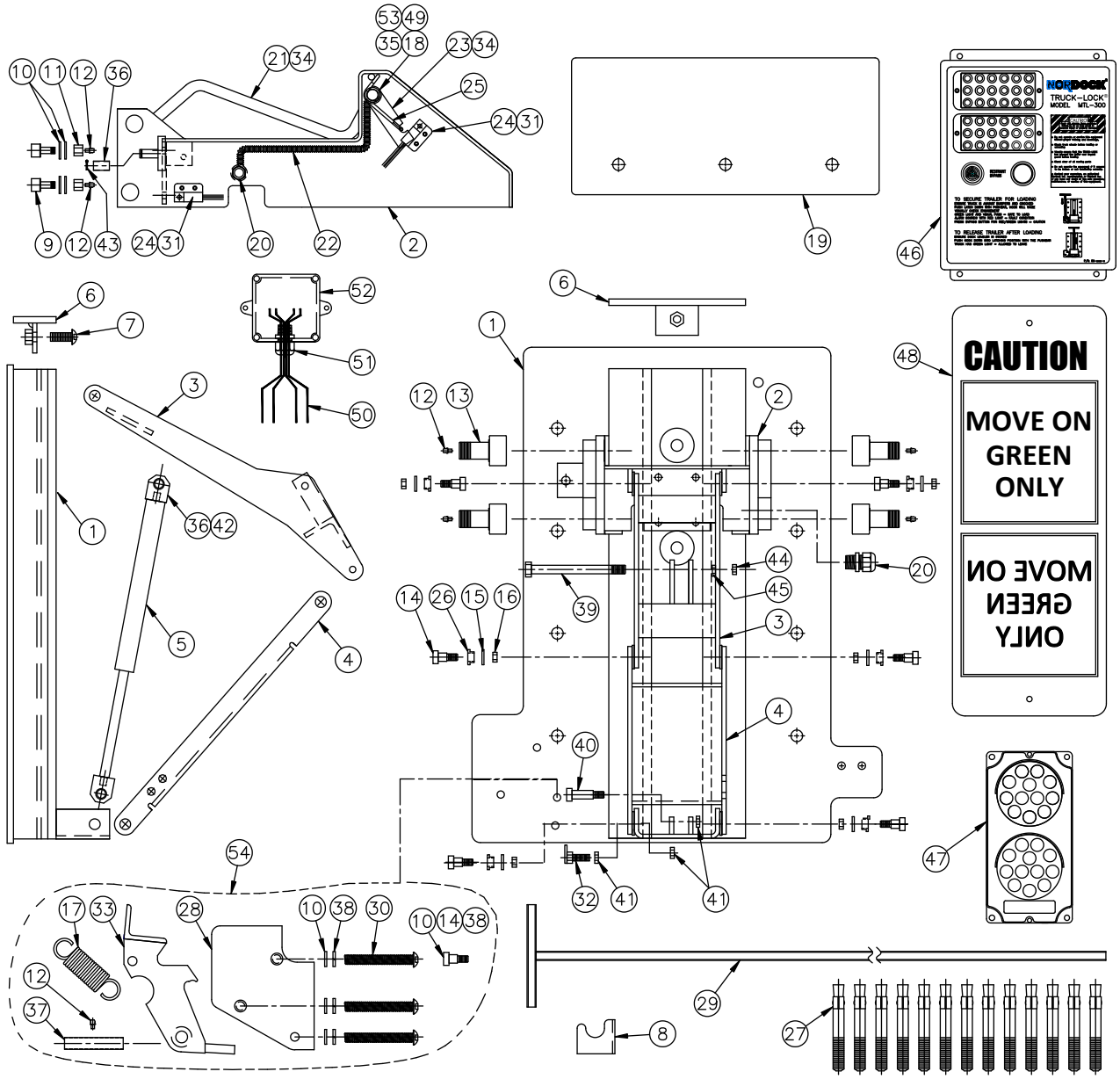

Item	Qty.	Description / Model		P/N	Note
1	1	Back Plate Weldment		52-0158	
2	1	Hook Weldment		52-0102	
3	1	Triangle Arm Weldment		52-0157	
4	1	Tension Arm		53-0123	
5	1	Gas Spring, MTL Series Restraint (Rod End Down)	Gas Spring only…….. C/w end blocks (Pt 42) and Bushings (Pt 36)……..	53-0164 52-0166	
6	1	Stop Plate Weldment		52-0106	
7	1	Bolt, Button Head, 1/2” x 1 1/2” Stainless Steel		13-0966	
8	1	Push Bar Hanger Bracket		53-0110	
9	4	Bearing Cam Follower, Ø3/4”		13-0915	
10	12	Washer, 3/8” SAE, ZP		13-0203	

Item	Qty.	Description / Model	P/N	Note
11	4	Nut, 3/8”-24 x1/2” Nylock, ZP	13-0969	
12	9	Grease Fitting, 3/16”, Drive-in	13-0655	
13	4	Bearing, Cam Follower, Ø 1-3/4", Heavy Stud	13-0916	
14	7	Bolt, Shoulder, 1/2" x 1/2", ZP	13-0965	
15	6	Washer, Flat, 1/2", STD, ZP	13-0267	
16	6	Nut, Hex, Jam 3/8"-16, Nylock	13-1331	
17	1	Extension Spring, .148" Wire, 4-1/2" FL (Latch)	23-0441	
18	1	Pivot Shaft Sensor Tube	53-0183	
19	1	Horizontal Shear Plate, ZP	53-0108	
20	1	Connector, 1/2" Threaded, Strain Relief, Aluminium	13-1013	
21	1	Sensor Bar Weldment, TL Series Restraint	52-0111	
22	2	Conduit, Flex, 1/4" x 14” long	13-1159-14	
23	1	Sensor Bar Trip Plate, TL Series Restraint	52-0110	
24	2	Proximity Switch, N/O, 18" Wire Leads (P/C FP2000)	13-0985	
25	1	Torsion Sensor Bar Spring	23-0131	
26	6	Bushing, Flange, 1/2" ID x 5/8" OD x 3/8", Oilite	13-0953	
27	13	Anchor, Concrete, Wedge, Ø5/8" x 5", ZP	13-0779	
28	1	Latch Cover Plate	53-0181	
29	1	Push Bar Weldment	52-0108	
30	3	Bolt, SHCS 3/8 x 4 1/4, Plated	13-1482	
31	2	Spacer, Plastic, 0.210” Thick	(c/w 24)	
32	1	Bolt Weldment, 3/8, PRS Sensor	52-0119	
33	1	Latch Weldment	52-0107	
34	2	Socket Head Cap Screw, 1/4"-28 x 1/2" Long	13-1175	
35	3	Wire Ties 8”	S3-0078	
36	3	Bushing, Oilite, 1/2"ID x 5/8"OD x 3/4"Long	13-0963	
37	3	Pipe Spacer, 3/8" Schedule 80	53-0144	
38	4	Lock washer, 3/8", ZP	13-0767	
39	1	Hex Head Bolt, ½” x 5 1/2” long, plated	13-1638	
40	1	Shoulder Bolt, ½” x 1 1/4” long, 3/8” thread	13-1365	
41	3	Jam Nut, 3/8” plated	13-1021	
42	2	Cylinder End Block	C3-0118	
43	1	Cotter Pin, 1/8” x 1” long	13-0171	
44	1	Nut, Nylock ½”	13-0750	
45	1	Jam Nut, ½”	13-1639	
46	1	Control Panel, LED lights	58-0199	
47	1	Outside Traffic Light, Red and Green, LED lights	13-3282	
48	1	Sign, Outside Caution	23-0124	
49	1	Sensor Bar Pivot Shaft	53-0128	
50	1	Cable Sensor, TL Series Restraint	53-0118	
51	1	Connector, ½” Threaded, Strain Relief, Nylon	13-0419	
52	1	Enclosure, Conduit box, 4 x 4 PVC	13-2145	
53	2	Bushing, Flange, 5/8" ID x 3/4" OD x 5/8", Oilite	13-0433	
54	A/R	Latch Assembly complete (Pts 10,12,14,17,28,33,37,38)	52-0114	

NORDOCK®

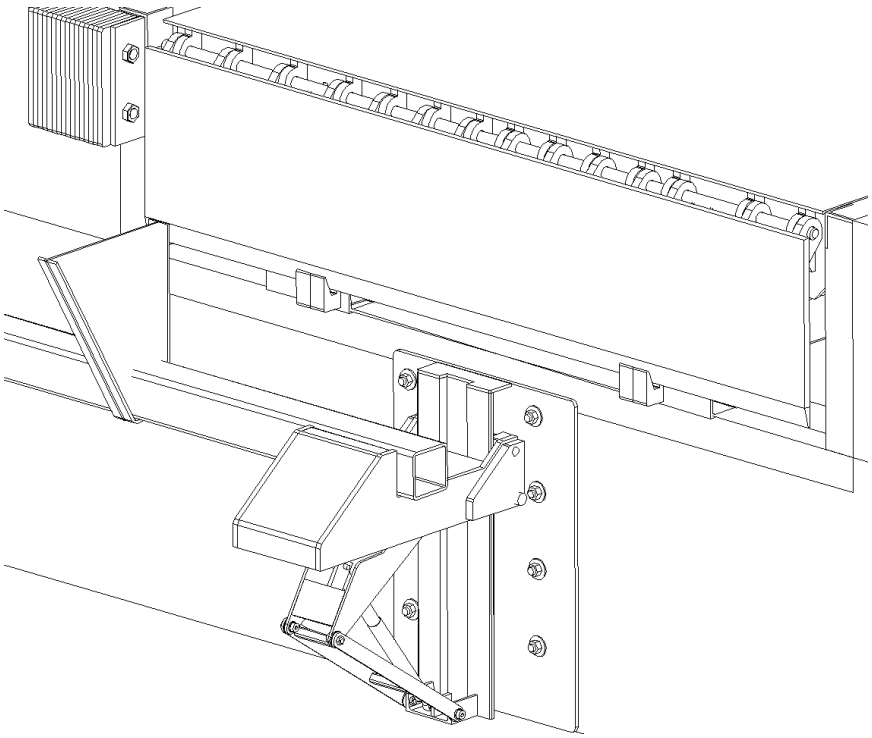

TRUCK-LOCK® SERIES
ATL-400

Low Profile Automatic Vehicle Restraint

Parts Manual

This manual applies to ATL-400 series restraints manufactured after 2013/06/01 with serial numbers 25005 and greater.

P/N: 59-0004 Rev. K

NORDOCK INC.
Website: nordockinc.com ~ Email: sales@nordockinc.com ~ Toll free: 866-885-4276
Nordock Inc. reserves the right to make changes to specifications without notice or obligation. Nordock products may be covered by various U.S. and foreign patents or pending application.

Parts Replacement

⚠ WARNING

Before servicing this restraint, read and follow the safety practices contained in this manual. Failure to follow the guidelines in this manual and those in effect in the workplace can result in serious bodily harm and equipment damage.

Always replace traffic light bulbs with 28VDC, #2233 bulbs or equivalent. Using 12V automotive type bulbs, such as a #1156 will cause damage to the control panel components that will not be covered under warranty.

NOTE

Before removing the stop plate from the top of the track, ensure that the hook is not under pressure against the bottom of it. This will help avoid pinching fingers or other body parts.

Removing Hook From Track

If the hook has to be removed to replace damaged or worn parts, the following procedure must be used to avoid personal injury.

1. Press the “LOCK” pushbutton and allow the hook to reach the top of its travel.
2. Block up the restraint hook to support its weight when hydraulic pressure is removed.
3. Lock-Out and Tag the power OFF at the disconnect supplying the control panel.
4. Unscrew retaining bolt from front of track and remove stop plate.
5. Remove the upper cylinder bolt and jam nut.

NOTE

Do not use a pry bar on the rod as it may damage the surface causing premature failure of the cylinder.

6. Once the rod end of the cylinder has been disconnected, the hook can be lifted out of the track and lowered to the ground in front of the back-plate without disconnecting any of the linkages.

Re-Installing Hook Into Track

1. Lower hook back into track and block up at a height so that the cylinder may be re-installed easily.
2. Position the cylinder end block between the upper mounting brackets and from the left side of the arm assembly, reinsert the 5 ½” long bolt through the brackets and cylinder end, replacing the jam nut and nut.
3. Re-install stop plate and retaining bolt.
4. Turn on power to the control panel and press “LOCK” to raise the hook up off the support blocking
5. Remove blocking and press “RELEASE” to allow the hook to store
6. Turn RESTRAINT BYPASS selector switch to “OFF” to change outside light to green.

Parts List

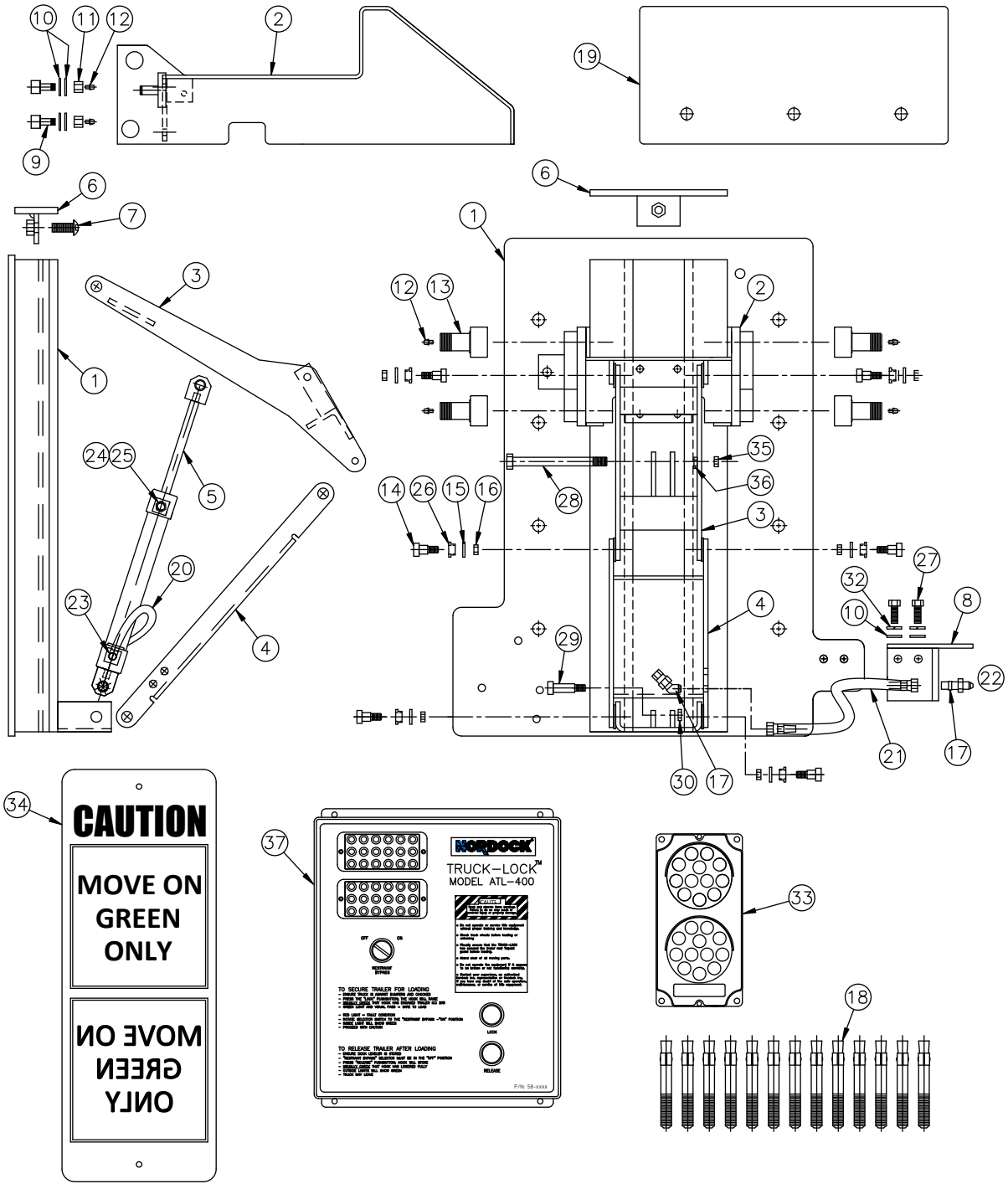
CAUTION
MOVE ON GREEN ONLY
MOVE ON GREEN ONLY
NORDOCK
TRUCK–LOCK™
MODEL ATL–400

Item	Qty.	Description / Model		P/N	Note
1	1	Back Plate Weldment		52-0158	
2	1	Hook Weldment		52-0102	
3	1	Triangle Arm Weldment		52-0157	
4	1	Tension Arm		53-0123	
5	1	Hydraulic Cylinder, ATL Series Restraint	Cylinder with ends …… C/w adapter, breather (24,25)	C1-0079 C1-0091	
6	1	Stop Plate Weldment		52-0106	
7	1	Bolt, Button Head, 1/2” x 1 1/2” Stainless Steel		13-0966	
8	1	Hose Mounting Bracket, ATL Series Restraint		52-0116	
9	4	Bearing Cam Follower, Ø3/4”		13-0915	
10	14	Washer, 3/8” SAE, ZP		13-0203	
11	4	Nut, 3/8”-24 x 1/2” Nylock, ZP		13-0969	
12	8	Grease Fitting, 3/16”, Drive-in		13-0655	
13	4	Bearing, Cam Follower, Ø 1-3/4", Heavy Stud		13-0916	
14	6	Bolt, Shoulder, 1/2" x 1/2", ZP		13-0965	
15	6	Washer, Flat, 1/2", STD, ZP		13-0267	
16	6	Nut, Hex, Nylock Jam 3/8"-16		13-1331	
17	2	Fitting, Hydraulic (#4) 45 Degrees, Bulkhead		13-1170	
18	13	Anchor, Concrete, Wedge, Ø5/8" x 5", ZP		13-0799	
19	1	Horizontal Shear Plate		53-0108	
20	1	Hose, Hydraulic (1/8) x 6 3/4” Long		13-1232	
21	1	Hose, Hydraulic (#4) x 7 1/4” Long		52-0164	
22	1	Hose, Hydraulic (1/4) x 16’ Long, SAE100 R1AT		52-0165	
23	1	Fitting, Hydraulic (#4) 90° 7/16 MORB x 7/16 MJIC		13-0905	
24	1	Adapter, Str. 7/16 (4) MORB ¼ (4) FNPT		13-0489	
25	1	Breather, Sintered Bronze		13-1383	
26	6	Bushing, Flange, 1/2" ID x 5/8" OD x 3/8", Oilite		13-0953	
27	2	Bolt, 3/8” x 1”		13-0843	
28	1	Bolt, Hex Head, ½” x 5 1/2” long, plated		13-1638	
29	1	Shoulder Bolt, ½” x 1 ¼” long, 3/8” thread		13-1365	
30	1	Jam Nut, 3/8”		13-1021	
32	2	Washer, Lock, 3/8”		13-0767	
33	1	Outside Traffic Light, Red and Green		13-3282	
34	1	Sign, Outside Caution		23-0124	
35	1	Nut, ½” Nylock		13-0750	
36	1	Jam Nut, ½” plated		13-1639	
37	1	Control Panel		58-0182	
38	1	Pressure Switch, #4 SAE (not shown)		13-1835	

NORDOCK®

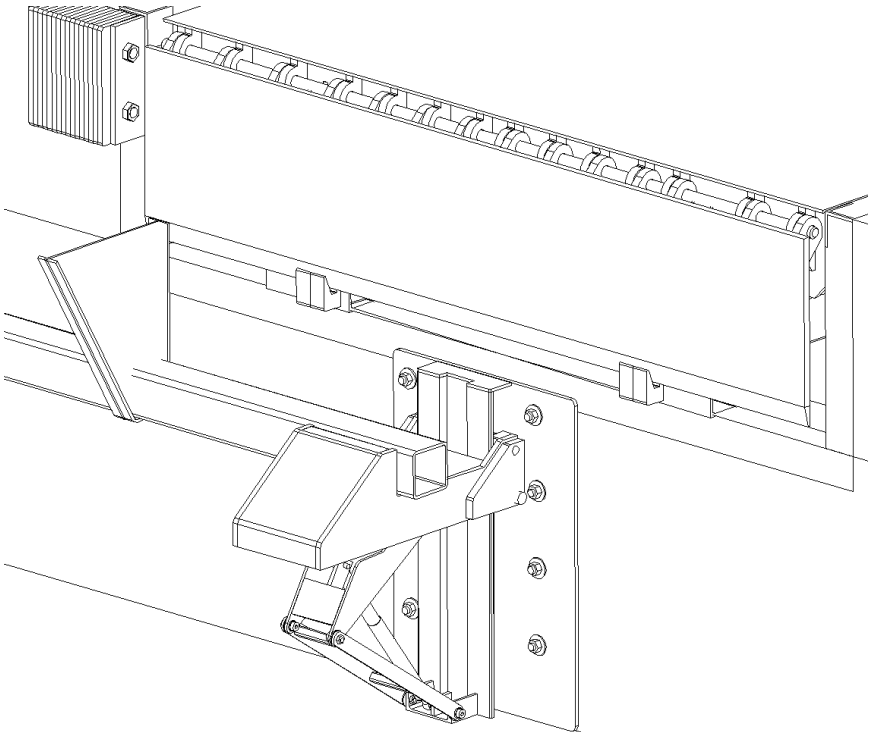

TRUCK-LOCK® SERIES
ATL-450

Low Profile Automatic Vehicle Restraint

Parts Manual

This manual applies to ATL-450 series restraints manufactured on or after 2013/06/01 with serial numbers 25005 and greater.

P/N: 59-0007-P

NORDOCK INC.

Website: nordockinc.com ~ Email: sales@nordockinc.com ~ Toll free: 866-885-4276

Nordock Inc. reserves the right to make changes to specifications without notice or obligation. Nordock products may be covered by various U.S. and foreign patents or pending application.

Parts Replacement

⚠ WARNING

Before servicing this restraint, read and follow the safety practices contained in this manual. Failure to follow the guidelines in this manual and those in effect in the workplace can result in serious bodily harm and equipment damage.

Always replace traffic light bulbs with 28VDC, #2233 bulbs or equivalent. Using 12V automotive type bulbs, such as a #1156 will cause damage to the control panel components that will not be covered under warranty.

NOTE

Before removing the stop plate from the top of the track, ensure that the hook is not under pressure against the bottom of it. This will help avoid pinching fingers or other body parts.

Removing Hook From Track

If the hook has to be removed to replace damaged or worn parts, the following procedure must be used to avoid personal injury.

1. Press the “LOCK” pushbutton to allow the hook to start to raise.
2. Remove power once the hook is almost to the top of its travel.
3. Lock-Out and Tag the power OFF at the disconnect supplying the control panel.
4. Unscrew retaining bolt from front of track and remove stop plate.
5. Block up the restraint hook to support its weight when the cylinder is removed.
6. Remove the 5 ½” long upper cylinder bolt and jam nut.

NOTE

Do not use a pry bar on the cylinder rod as it may damage the surface causing premature failure of the cylinder.

7. Once the rod end of the cylinder has been disconnected, the hook can be lifted out of the track and lowered to the ground in front of the back-plate without disconnecting any of the linkages.

Re-installing Hook Into Track

1. Lower hook back into track and block up at a height so that the cylinder may be re-installed easily.
2. Position the cylinder end block between the upper mounting brackets. From the left side of the arm assembly, reinsert the 5 ½” long bolt through the brackets and cylinder end, replacing the jam nut and nut.
3. Re-install stop plate and retaining bolt.
4. Turn on power to the control panel and press “RELEASE” to store the hook.

Parts List

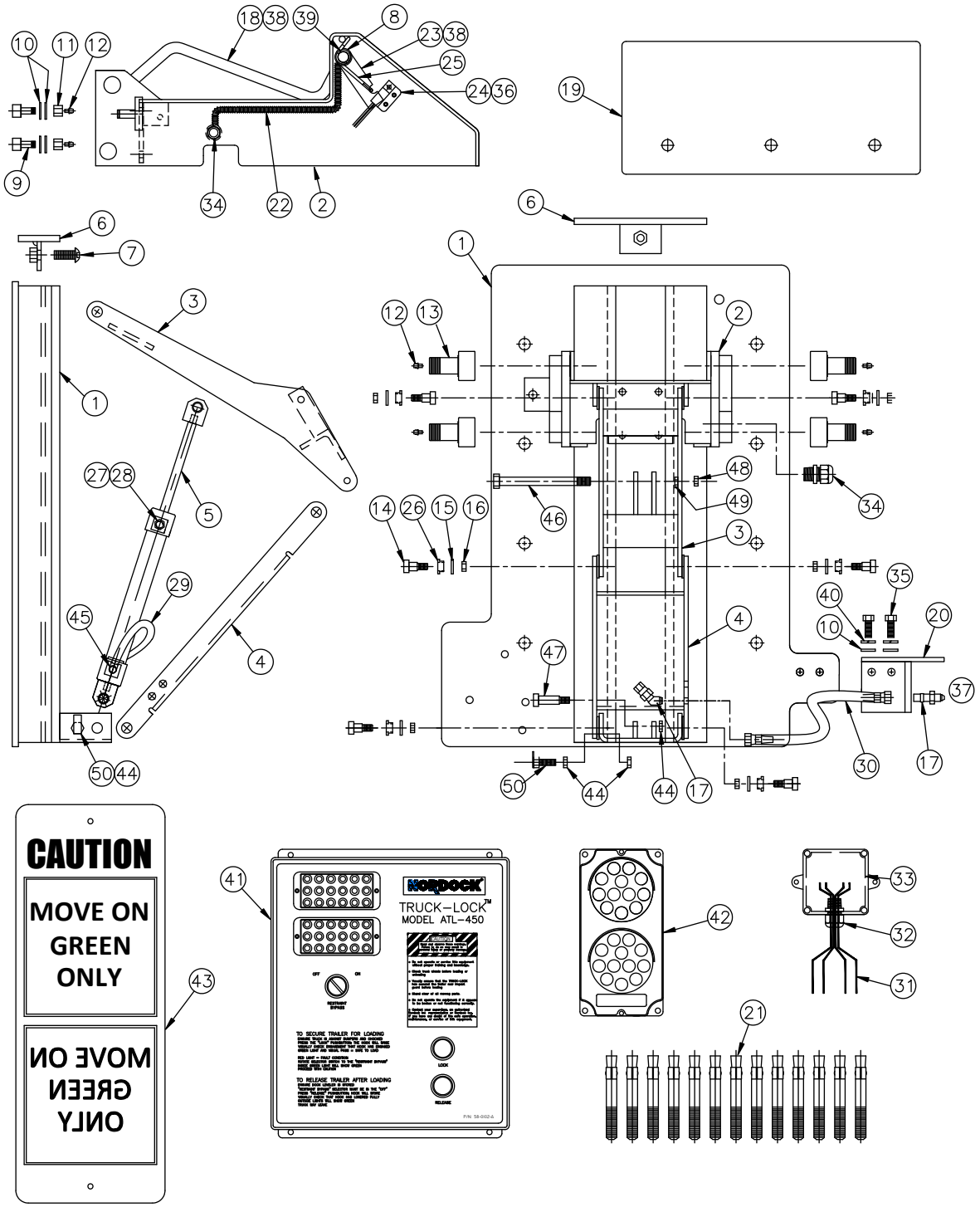

Item	Qty	Description / Model	P/N	Note
1	1	Back Plate Weldment	52-0158	
2	1	Hook Weldment	52-0102	
3	1	Triangle Arm Weldment	52-0157	
4	1	Tension Arm	53-0123	

Item	Qty	Description / Model		P/N	Note
5	1	Hydraulic Cylinder, ATL Series Restraint	Cylinder only…….. C/w Breather, Adapter…..	C1-0079 C1-0091	
6	1	Stop Plate Weldment		52-0106	
7	1	Bolt, Button Head, 1/2” x 1 1/2” Stainless Steel		13-0966	
8	1	Pivot Bar Spacer Tube		53-0183	
9	4	Bearing Cam Follower, Ø3/4”		13-0915	
10	14	Washer, 3/8” SAE, ZP		13-0203	
11	4	Nut, 3/8”-24 x 1/2” Nylock, ZP		13-0969	
12	8	Grease Fitting, 3/16”, Drive-in		13-0655	
13	4	Bearing, Cam Follower, Ø 1-3/4", Heavy Stud		13-0916	
14	6	Bolt, Shoulder, 1/2" x 1/2", ZP		13-0965	
15	6	Washer, Flat, 1/2", STD, ZP		13-0267	
16	6	Nut, Hex, Nylock Jam 3/8"-16		13-1331	
17	2	Fitting, Hydraulic (#4) 45 Degrees, Bulkhead		13-1170	
18	1	Sensor Bar Weldment, TL Series Restraint		52-0111	
19	1	Horizontal Shear Plate		53-0108	
20	1	Hose Mounting Bracket, ATL Series Restraint		52-0116	
21	11	Anchor, Concrete, Wedge, Ø5/8" x 5", ZP		13-0799	
22	1	Conduit, Flex, 1/4" x 14"		13-1159	
23	1	Sensor Bar Trip Plate, TL Series Restraint		52-0110	
24	1	Proximity Switch, N/O, 18" Wire Leads (P/C FP2000)		13-0985	
25	1	Torsion Sensor Bar Spring		23-0131	
26	6	Bushing, Flange, 1/2" ID x 5/8" OD x 3/8", Oilite		13-0953	
27	1	Breather, Sintered Bronze		13-1383	
28	1	Adapter, Str. 7/16 (4) MORB ¼ (4) FNPT		13-0489	
29	1	Hose, Hydraulic (1/8) x 6 3/4” Long		13-1232	
30	1	Hose, Hydraulic (#4) x 7 1/4” Long		52-0163	
31	1	Cable, Sensor, TL Series Restraint		53-0118	
32	1	Connector, 1/2" Threaded, Strain Relief, Nylon		13-0419	
33	1	Enclosure, Conduit Box, 4 x 4 PVC		13-2145	
34	1	Connector, 1/2" Threaded, Strain Relief, Aluminium		13-1013	
35	2	Bolt, 3/8” x 1”		13-0843	
36	1	Spacer, Plastic, 0.210” Thick		(c/w 24)	
37	1	Hose, Hydraulic (1/4) x 16’ Long, SAE100 R1AT		52-0165	
38	2	Screw, Socket Head, 1/4"-28 x 1/2" Long, Plated		13-1175	
39	1	Sensor Bar Pivot Shaft, TL Series Restraint		53-0128	
40	2	Washer, Lock, 3/8”		13-0767	
41	1	Control Panel, LED lights		58-0159	
42	1	Outside Traffic Light, LED Red and Green		13-3282	
43	1	Sign, Outside Caution		23-0124	
44	3	Jam Nut, 3/8”, plated		13-1021	
45	1	Fitting, Hydraulic (#4) 90° 7/16 MORB x 7/16 MJIC		13-0905	
46	1	Bolt, Hex Head, ½” x 5 1/2” long, plated		13-1638	
47	1	Shoulder Bolt, ½” x 1 ¼” long, 3/8” thread		13-1365	
48	1	Nut, Nylock 1/2”		13-0750	
49	1	Jam Nut, 1/2” plated		13-1639	
50	1	Sensor Activator Bolt		52-0119	
51	1	Pressure Switch, (not shown)		13-1835	

NORDOCK®

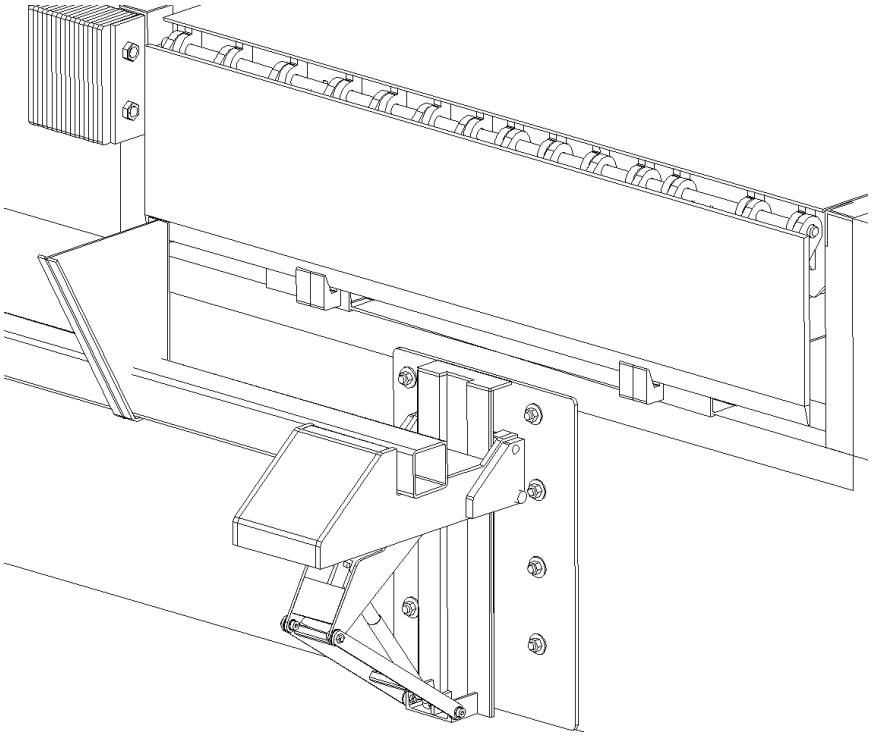

TRUCK-LOCK® SERIES
ATL-500

Low Profile Automatic Vehicle Restraint

Parts Manual

This manual applies to ATL-500 series restraints manufactured on or after 2013/06/24, with serial numbers 25005 and greater.

59-0005 Rev. T

NORDOCK INC.

Website: nordockinc.com ~ Email: sales@nordockinc.com ~ Toll free: 866-885-4276

Nordock Inc. reserves the right to make changes to specifications without notice or obligation. Nordock products may be covered by various U.S. and foreign patents or pending application.

Parts Replacement

⚠ WARNING

Before servicing this restraint, read and follow the safety practices contained in this manual. Failure to follow the guidelines in this manual and those in effect in the workplace can result in serious bodily harm and equipment damage.

NOTE

Before removing the stop plate from the top of the track, ensure that the hook is not under pressure against the bottom of it. This will help avoid pinching fingers or other body parts.

Removing Hook From Track

If the hook has to be removed to replace damaged or worn parts, the following procedure must be used to avoid personal injury.

1. Press the “LOCK” pushbutton to allow the hook to start to raise.
2. Remove power once the hook is approximately halfway up the track.
3. Lock-Out and Tag the power off at the disconnect supplying the control panel.
4. Unscrew retaining bolt from front of track and remove stop plate.
5. Block up the restraint hook to support its weight when the cylinder is removed.
6. Remove the nut from the 5 ½” long upper cylinder bolt and slide the bolt out, also removing the jam nut.

NOTE

Do not use a pry bar on the cylinder rod as it may damage the surface causing premature failure of the cylinder.

7. Once the rod end of the cylinder has been disconnected, the hook can be lifted out of the track and lowered to the ground in front of the back-plate without disconnecting any of the linkages.

Re-installing Hook Into Track

1. Lower hook back into track and block up at a height so that the cylinder may be re-installed easily.
2. From the left side of the arm assembly, reinsert the 5 ½” long bolt through the brackets and cylinder end, replacing the jam nut and nut.
3. Re-install stop plate and retaining bolt.
4. Turn on power to the control panel and press “RELEASE” to store the hook.

Parts List

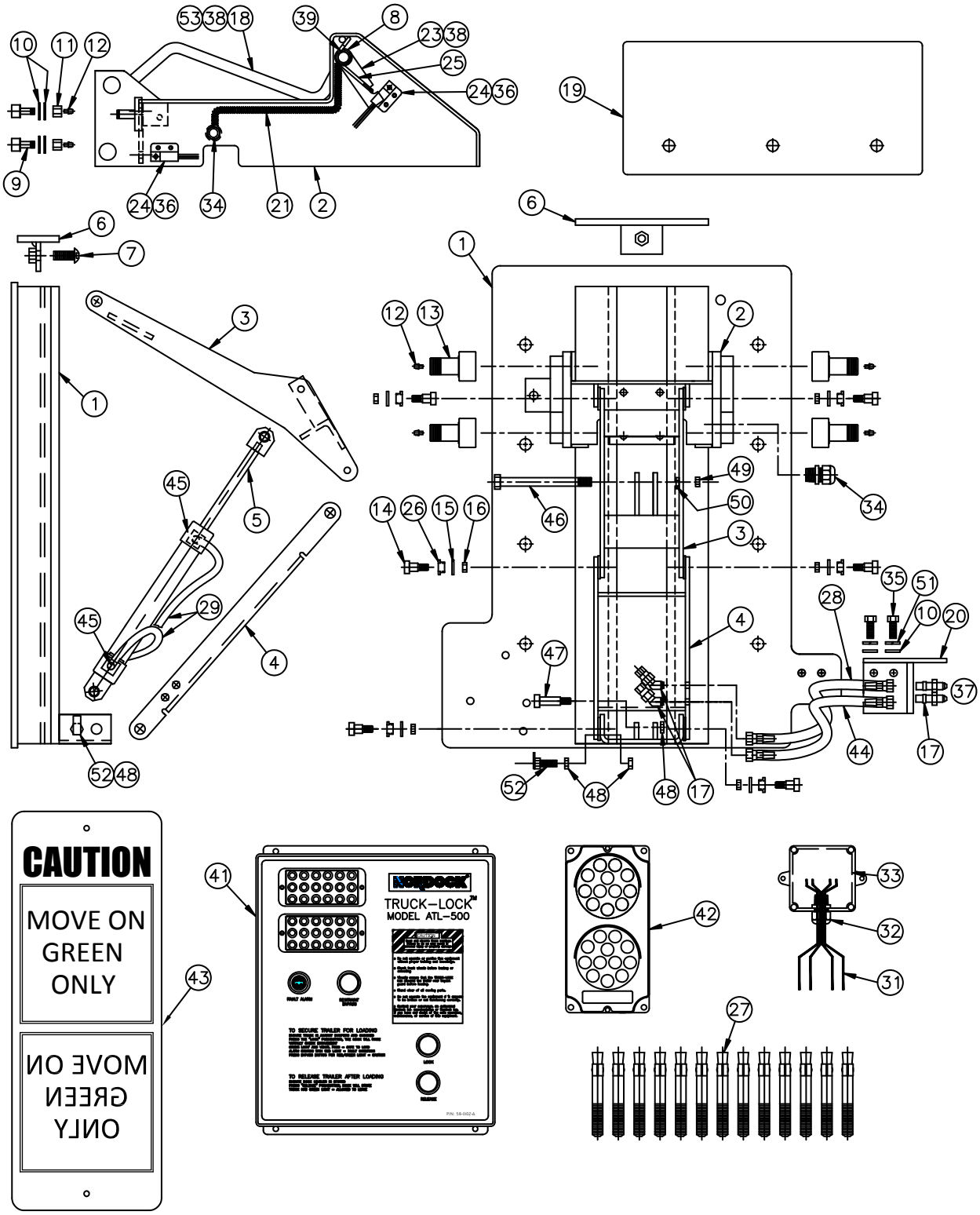

Item	Qty	Description / Model	P/N	Note
1	1	Back Plate Weldment	52-0158	
2	1	Hook Weldment	52-0102	
3	1	Triangle Arm Weldment	52-0157	

Item	Qty	Description / Model	P/N	Note
4	1	Tension Arm	53-0123	
5	1	Hydraulic Cylinder, ATL Series Restraint, complete….. Cylinder bushing, ½" x 5/8" x ¾" long, 2 per cylinder	C1-0079 13-0963	
6	1	Stop Plate Weldment	52-0106	
7	1	Bolt, Button Head, 1/2" x 1 1/2" Stainless Steel	13-0966	
8	1	Pivot Shaft Spacer Tube, 4-15/16" long, ZP	53-0183	
9	4	Bearing Cam Follower, Ø3/4"	13-0915	
10	14	Washer, 3/8" SAE, ZP	13-0203	
11	4	Nut, 3/8"-24 x 1/2" Nylock, ZP	13-0969	
12	8	Grease Fitting, 3/16", Drive-in	13-0655	
13	4	Bearing, Cam Follower, Ø 1-3/4", Heavy Stud	13-0916	
14	6	Bolt, Shoulder, 1/2" x 1/2", ZP	13-0965	
15	6	Washer, Flat, 1/2", STD, ZP	13-0267	
16	6	Nut, Hex, Jam 3/8"-16, Nylock	13-1331	
17	4	Fitting, Hydraulic (#4) 45 Degrees, Bulkhead	13-1170	
18	1	Sensor Bar Weldment, TL Series Restraint	52-0111	
19	1	Horizontal Shear Plate	53-0108	
20	1	Hose Mounting Bracket, ATL Series Restraint	52-0116	
21	1	Conduit, Flex, 1/4" x 14 1/2"	13-1159	
22	1	Conduit, Flex, 1/4" x 14"	13-1159	
23	1	Sensor Bar Trip Plate, TL Series Restraint	52-0110	
24	2	Proximity Switch, N/O, 18" Wire Leads (P/C FP2000)	13-0985	
25	1	Torsion Sensor Bar Spring	23-0131	
26	6	Bushing, Flange, 1/2" ID x 5/8" OD x 3/8", Oilite	13-0953	
27	11	Anchor, Concrete, Wedge, Ø5/8" x 5", ZP	13-0779	
28	1	Hose, Hydraulic (#4) x 8 1/4" Long	52-0163	
29	2	Hose, Hydraulic (1/8) x 6 3/4" Long	13-1232	
30	2	Pressure Switch, (not shown)	13-1116	
31	1	Cable, Sensor, TL Series Restraint	53-0118	
32	1	Connector, 1/2" Threaded, Strain Relief, Nylon	13-0419	
33	1	Enclosure, Conduit Box, 4 x 4 PVC	13-2145	
34	1	Connector, 1/2" Threaded, Strain Relief, Aluminium	13-1013	
35	2	Bolt, 3/8" x 1"	13-0887	
36	2	Spacer, Plastic, 0.210" Thick	(c/w 24)	
37	2	Hose, Hydraulic (1/4) x 16', SAE100 R1AT, not shown	52-0165	
38	2	Screw, Socket Head, 1/4"-28 x 1/2" Long, Plated	13-1175	
39	1	Sensor Bar Pivot Shaft, TL Series Restraint	53-0128	
40	2	Washer, Flat, 3/8", STD	13-0968	
41	1	Control Panel, LED lights	58-0614	
42	1	Outside Traffic Light, LED Red and Green	13-3282	
43	1	Sign, Outside Caution	23-0124	
44	1	Hose, Hydraulic (#4) x 7 1/4" Long	52-0164	
45	2	Fitting, Hydraulic (#4) 90° 7/16 MORB x 7/16 MJIC	13-0905	
46	1	Hex Head Bolt, ½" x 5 1/2" long	13-1638	
47	1	Shoulder Bolt, ½" x 1 ¼" long, 3/8" thread	13-1365	
48	3	Jam Nut, 3/8", plated	13-1021	
49	1	Nut, Nylock 1/2"	13-0750	
50	1	Jam Nut, 1/2" Plated	13-1639	
51	2	Washer, Lock, 3/8"	13-0767	
52	1	Sensor Activator Bolt	52-0119	
53	2	Bushing, Flange, 5/8" x ¾" x 5/8" long, Flange 1" x 1/8"	13-0433	

NORDOCK®

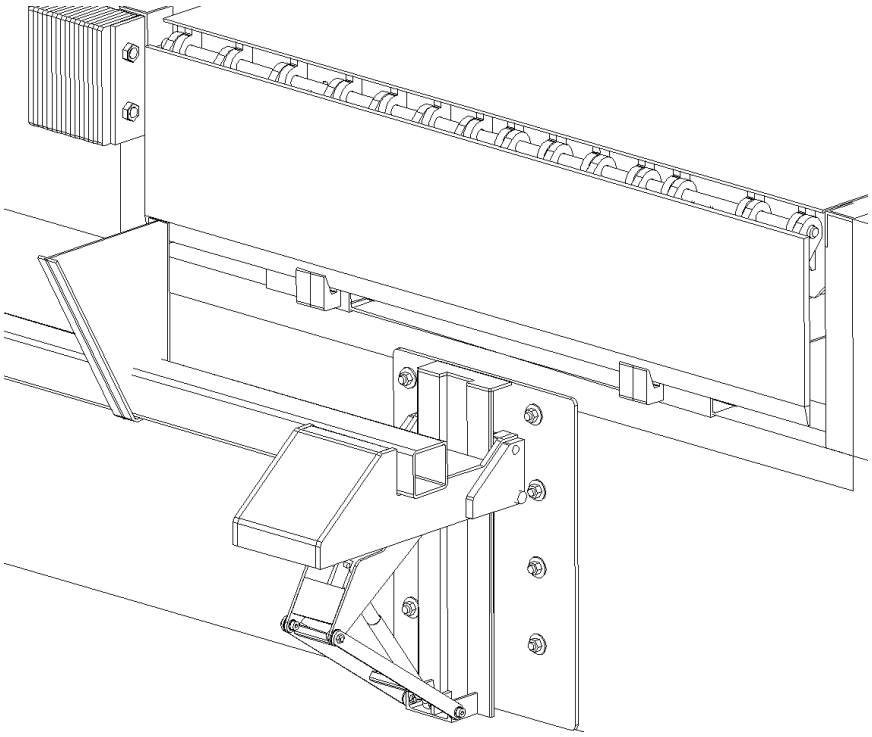

TRUCK-LOCK® SERIES
ATL-900

Low Profile Automatic Vehicle Restraint

Parts Manual

This manual applies to ATL-900 series restraints manufactured after 2013/06/01
With serial numbers 25005 and greater.

59-0009 Rev. H

NORDOCK INC.

Website: nordockinc.com ~ Email: sales@nordockinc.com ~ Toll free: 866-885-4276

Nordock Inc. reserves the right to make changes to specifications without notice or obligation. Nordock products may be covered by various U.S. and foreign patents or pending application.

Parts Replacement

⚠ WARNING

Before servicing this restraint, read and follow the safety practices contained in this manual. Failure to follow the guidelines in this manual and those in effect in the workplace can result in serious bodily harm and equipment damage.

NOTE

Before removing the stop plate from the top of the track, ensure that the hook is not under pressure against the bottom of it. This will help avoid pinching fingers or other body parts.

Removing Hook From Track

If the hook has to be removed to replace damaged or worn parts, the following procedure must be used to avoid personal injury.

1. Press the “LOCK” pushbutton to allow the hook to start to raise.
2. Remove power once the hook is approximately halfway up the track.
3. Lock-Out and Tag the power off at the disconnect supplying the control panel.
4. Unscrew retaining bolt from front of track and remove stop plate.
5. Block up the restraint hook to support its weight when the cylinder is removed.
6. Remove the upper cylinder bolt and jam nut.

NOTE

Do not use a pry bar on the rod as it may damage the surface causing premature failure of the cylinder.

7. Once the rod end of the cylinder has been disconnected, the hook can be lifted out of the track and lowered to the ground in front of the back-plate without disconnecting any of the linkages.

Re-installing Hook Into Track

1. Lower hook back into track and block up at a height so that the cylinder may be re-installed easily.
2. From the left side of the arm assembly, reinsert the 5 ½” long bolt through the brackets and cylinder end, replacing the jam nut and nut.
3. Re-install stop plate and retaining bolt.
4. Turn on power to the control panel and press “RELEASE” to store the hook.

Parts List

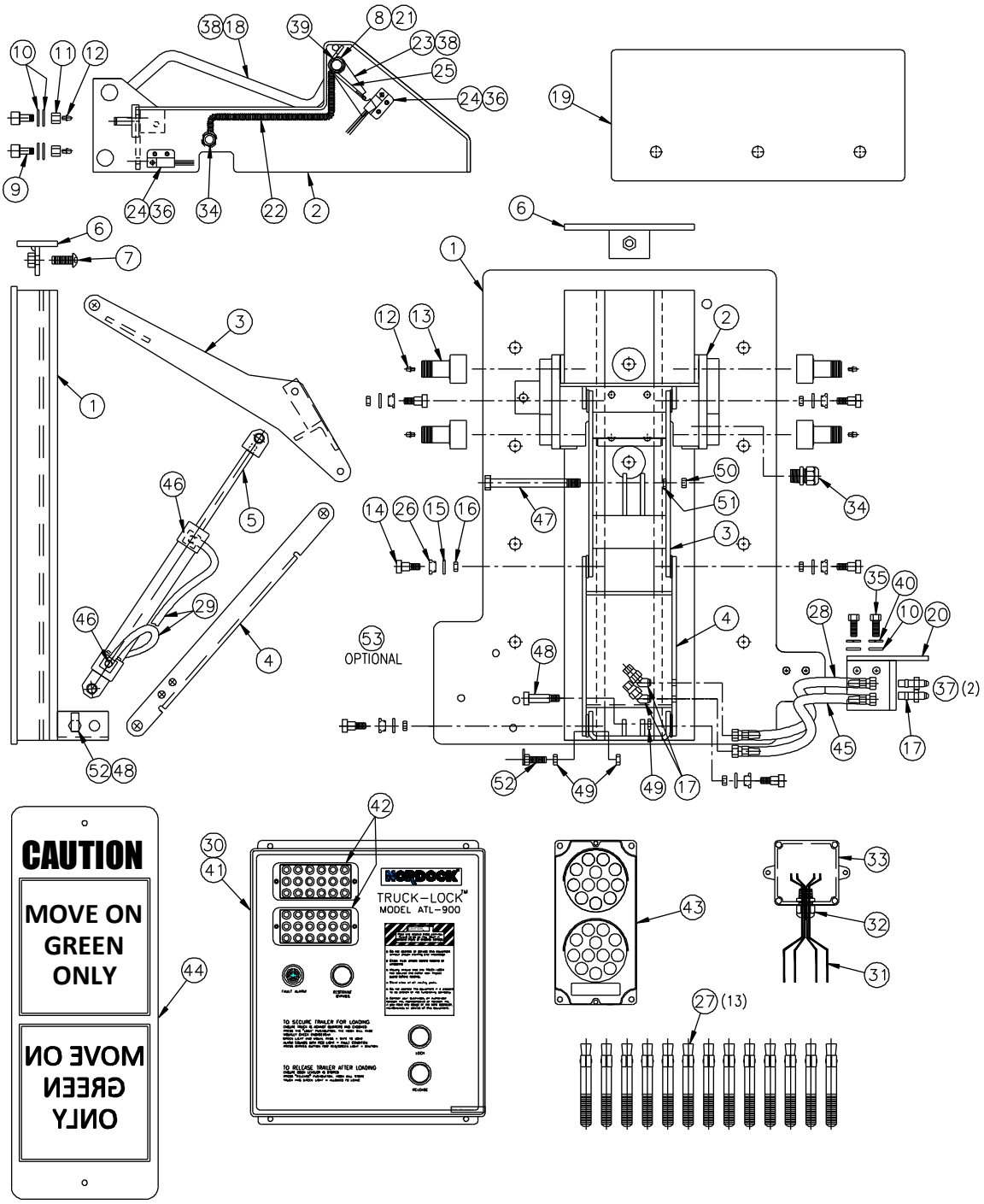

Item	Qty.	Description / Model	P/N	Note
1	1	Back Plate Weldment	52-0158	
2	1	Hook Weldment	52-0102	
3	1	Triangle Arm Weldment	52-0157	
4	1	Tension Arm	53-0123	

Item	Qty.	Description / Model		P/N	Note
5	1	Hydraulic Cylinder, ATL Series Restraint, complete…... Cylinder Bushing, ½" x 5/8" x ¾" long, 2 per cylinder		C1-0079 13-0963	
6	1	Stop Plate Weldment		52-0106	
7	1	Bolt, Button Head, 1/2" x 1 1/2" Stainless Steel		13-0966	
8	1	Pivot Shaft Spacer Tube		53-0183	
9	4	Bearing Cam Follower, Ø3/4"		13-0915	
10	10	Washer, 3/8" SAE, ZP		13-0203	
11	4	Nut, 3/8"-24 x 1/2" Nylock, ZP		13-0969	
12	8	Grease Fitting, 3/16", Drive-in		13-0655	
13	4	Bearing, Cam Follower, Ø 1-3/4", Heavy Stud		13-0916	
14	6	Bolt, Shoulder, 1/2" x 1/2", ZP		13-0965	
15	6	Washer, Flat, 1/2", STD, ZP		13-0267	
16	6	Nut, Hex, Jam 3/8"-16, Nylock		13-1331	
17	4	Fitting, Hydraulic (#4) 45 Degrees, Bulkhead		13-1170	
18	1	Sensor Bar Weldment, TL Series Restraint		52-0111	
19	1	Horizontal Shear Plate		53-0108	
20	1	Hose Mounting Bracket, ATL Series Restraint		52-0116	
21	2	Bushing, Flange, 5/8" ID x 3/4" OD x 5/8", 1" Flg,Oilite		13-0433	
22	2	Conduit, Flex, 1/4", 1 x 14", 1 x 14 ½"		13-1159	
23	1	Sensor Bar Trip Plate, TL Series Restraint		52-0110	
24	2	Proximity Switch, N/O, 18" Wire Leads (P/C FP2000)		13-0985	
25	1	Torsion Sensor Bar Spring		23-0131	
26	6	Bushing, Flange, 1/2" ID x 5/8" OD x 3/8", Oilite		13-0953	
27	11	Anchor, Concrete, Wedge, Ø5/8" x 5", ZP		13-0779	
28	1	Hose, Hydraulic (#4) x 8 1/4" Long		52-0163	
29	2	Hose, Hydraulic (1/8) x 6 3/4" Long		13-1232	
30	2	Pressure Switch (not shown)		13-1116	
31	1	Cable, Sensor, TL Series Restraint		53-0118	
32	1	Connector, 1/2" Threaded, Strain Relief, Nylon		13-0419	
33	1	Enclosure, Conduit Box, 4 x 4 PVC		13-2145	
34	1	Connector, 1/2" Threaded, Strain Relief, Aluminium		13-1013	
35	2	Bolt, 3/8" x 1" long		13-0887	
36	2	Spacer, Plastic, 0.210" Thick		(c/w 24)	
37	2	Hose, Hydraulic (1/4) x 16', SAE100 R1AT, not shown		52-0165	
38	2	Screw, Socket Head, 1/4"-28 x 1/2" Long, Plated		13-1175	
39	1	Sensor Bar Pivot Shaft, TL Series Restraint		53-0128	
40	2	Washer, Lock, 3/8"		13-0767	
41	1	Control Panel		58-0198	
42	1	Inside Marker Light, LED, 24VDC	Green Red	13-3358 13-3357	
43	1	Outside Traffic Light, LED Red and Green		13-3282	
44	1	Sign, Outside Caution		23-0124	
45	1	Hose, Hydraulic (#4) x 7 1/4" Long		52-0164	
46	2	Fitting, Hydraulic (#4) 90° 7/16 MORB x 7/16 MJIC		13-0905	
47	1	Hex Head Bolt, ½" x 5 1/2" long		13-1638	
48	1	Shoulder Bolt, ½" x 1 ¼" long, 3/8" thread		13-1365	
49	3	Jam Nut, Hex 3/8", plated		13-1021	
50	1	Nut, Nylock 1/2"		13-0750	
51	1	Jam Nut, 1/2" Plated		13-1639	
52	1	Sensor Activator Bolt		52-0119	
52	1	Optional - Adapter Plate for LH Hose Routing		53-0186	

NORDOCK®



SHUR-LOK™ VEHICLE RESTRAINT

Wheel Based Automatic Vehicle Restraint

Parts Manual

This manual applies to model SL-7000 restraints with serial numbers **55125** to **55126**

P/N 56131

NORDOCK INC.

Website: nordockinc.com ~ Email: sales@nordockinc.com ~ Toll free: 866-885-4276

Nordock Inc. reserves the right to make changes to specifications without notice or obligation. Nordock products may be covered by various U.S. and foreign patents or pending applications.

Part Lists

Chocking Unit Assembly:

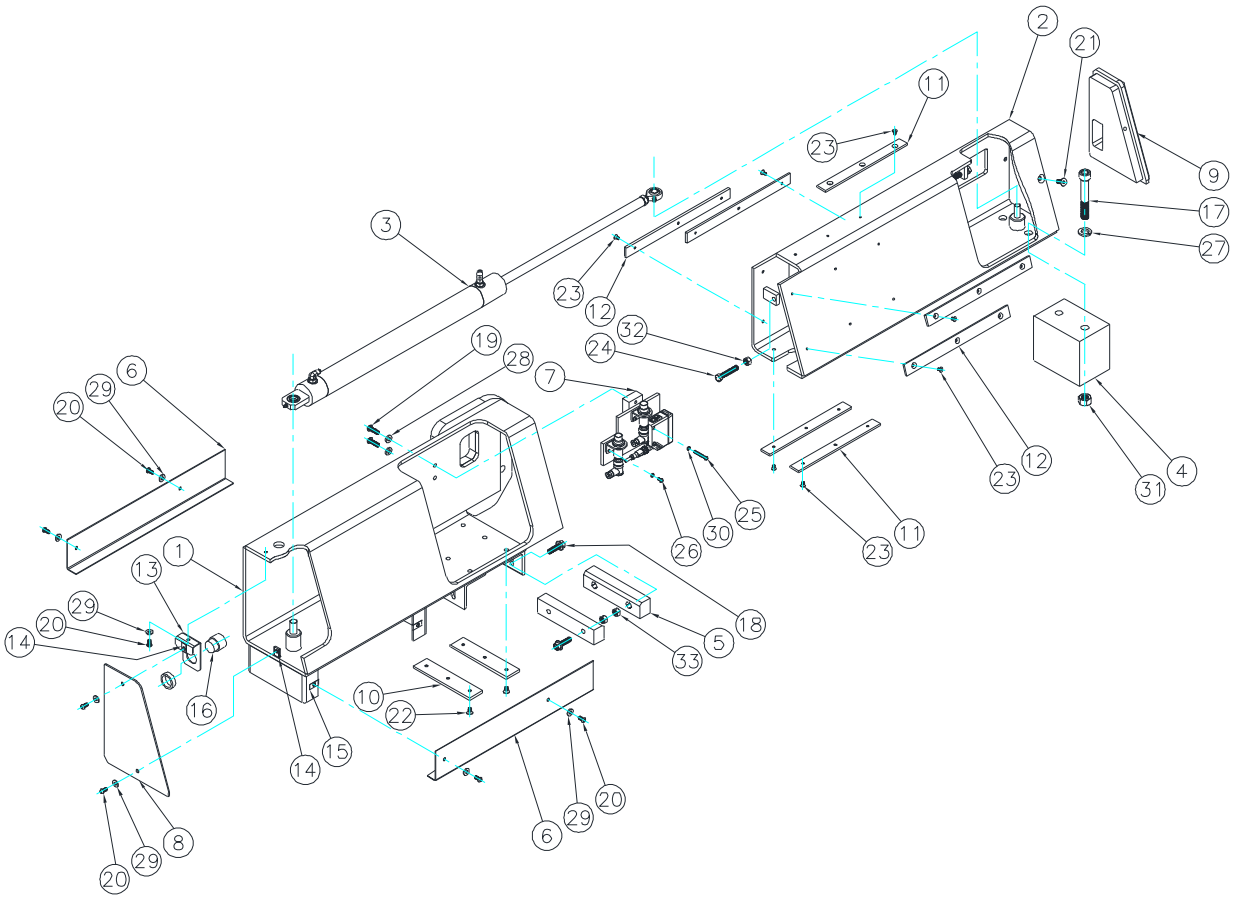

Item	Qty.	Description / Model	P/N	Note
1	1	Outside Box Weldment	52-0444	
2	1	Inside Box Weldment	52-0455	
3	1	Cylinder Assembly	C1-0126	
4	1	Slide Support Block	53-0626	
5	2	Guide Track Wear Block	53-0622	
6	2	Toe Guard, 1-L/H, 1-R/H	53-0605	
7	1	Chock Sensor Assembly	52-0448	
8	1	Cover Plate	53-0615	
9	1	End Cap	53-0655	
10	2	Guide Track Wear Pad	53-0623	
11	3	Slide Wear Strip, Short	53-0624	
12	4	Slide Wear Strip, Standard	53-0625	
13	1	Buzzer Mount Bracket	53-0647	
14	2	Clip-on Nut, Retainer, 5/16” Ctr.	13-4421	
15	4	Clip-on Nut, Retainer, 1/2” Ctr.	13-4422	
16	1	Audible Alarm/Buzzer	13-1239	
17	2	Screw, Socket Head Cap, 5/8-11 NC x 4” Lg.	13-5005	
18	4	Bolt, Hex Flanged, 3/8-16 NC x 1-1/4” Lg.	13-5008	
19	2	Screw, Button Head Cap, 5/16-18 NC x 1” Lg.	13-2684	
20	7	Screw, Button Head Cap, 1/4-20 x 3/4” Lg.	13-5009	
21	2	Screw, Flat Head Cap, 5/16-18 x 3/4” Lg.	13-5007	

22	6	Screw, Flat Head Cap, 1/4-20 x 1/2” Lg.	13-5006	
23	21	Screw, Flat Head Cap, #10-24 x 3/8” Lg.	13-2674	
24	2	Bolt, Hex Hd., 3/8-16 NC x 2” Lg.	13-5004	
25	2	Screw, Button Head Cap, #10-24 x 1-3/8” Lg.	13-4450	
26	4	Screw, Button Head Cap, #10-24 x 3/8” Lg.	13-4451	
27	2	Washer, Lock, 5/8”	13-0657	
28	2	Washer, Lock, 5/16”	13-0946	
29	7	Washer, Flat, 1/4”	13-4456	
30	6	Washer, Lock, #10	13-0948	
31	2	Nut, Hex, 5/8-11 NC	13-0289	
32	2	Nut, Hex, Jam, 3/8-16 NC	13-1331	
33	4	Nut, Hex, 3/8-16 NC	13-0619	

Slide Sensor Assembly

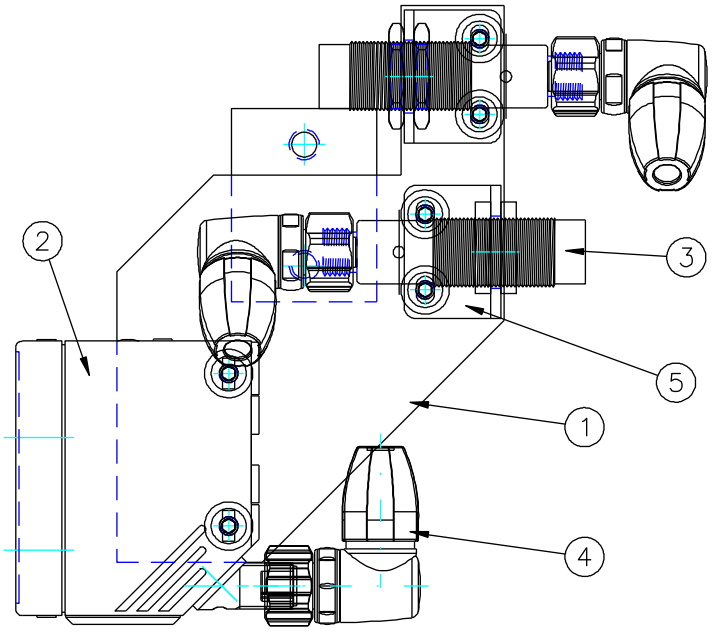

Item	Qty.	Main Cylinder	P/N	Note
1	1	Bracket Weldment	52-0447	
2	1	Sensor, Photoelectric, IFM Efector #04H200	13-4402	
3	2	Sensor, Proximity, IFM Efector #IGS213	13-3191	
4	3	Connecting Cable, 90 degree, IFM Efector #EVC815	13-6726	
5	2	Mounting Bracket, 10mm, IFM Efector #U20302	13-2437	

Overall Assembly:

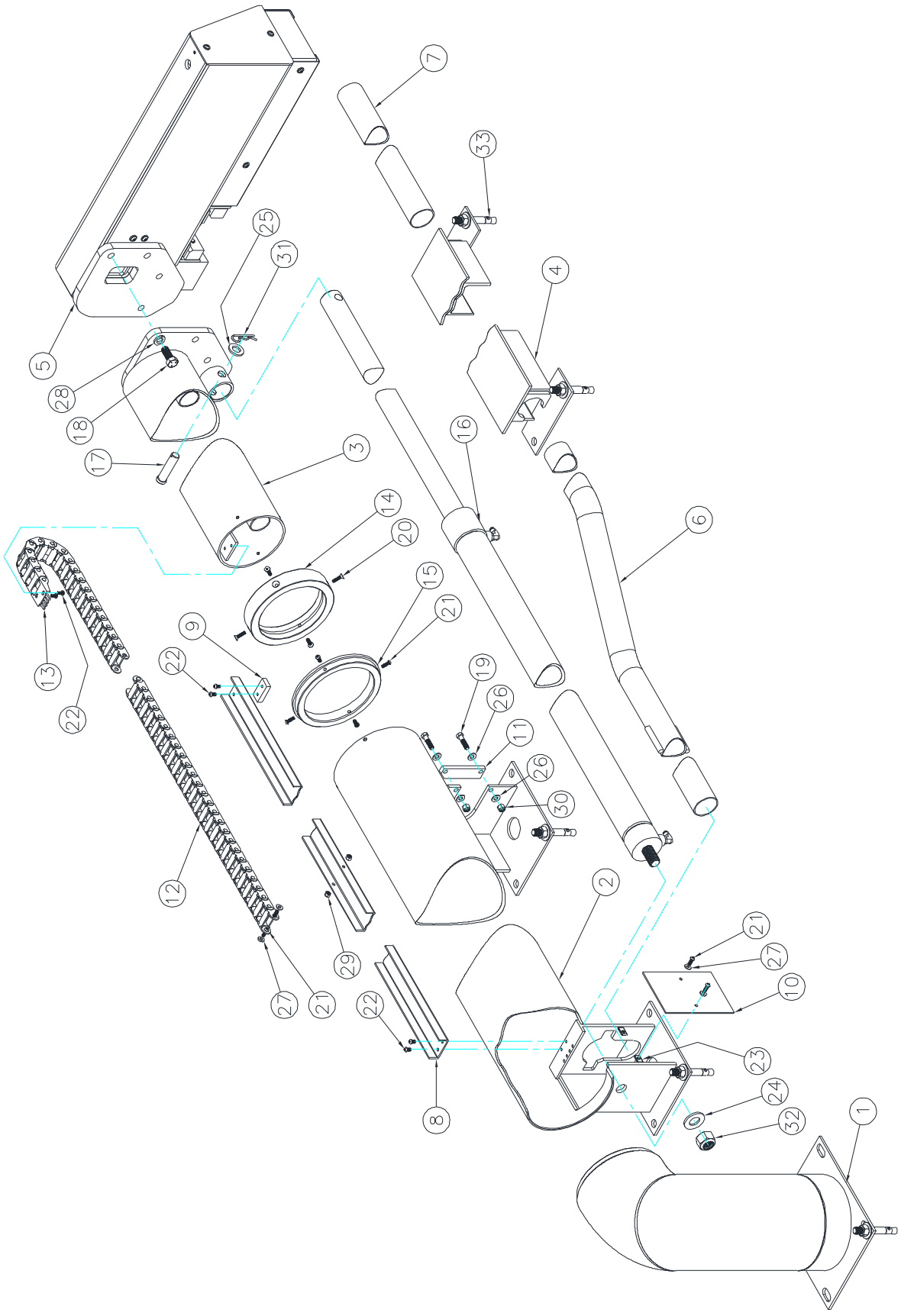

Item	Qty.	Description / Model	P/N	Note
1	1	Guide Elbow Assembly, L/H	52-0430	
2	1	Longitudinal Guide Weldment	52-0432	
3	1	Long Cylinder Guide Assembly	52-0434	
4	1	Guide Track Weldment	52-0405	
5	1	Cross-Head Slide Chock Assembly	52-0437	
6	1 1 1	Guide Conduit Assembly Conduit Coupling (not shown) Conduit Elbow	52-0416 13-6630 53-0656	
7	1	Entry Conduit	53-0644	
8	1	Hose Carrier Channel	53-0645	
9	1	Glider Block	53-0627	
10	1	Mount Stand Cover	53-0636	
11	1	Keeper Bar	53-0635	
12	1	Cable Carrier	13-4425	
13	1	Carrier Mount Bracket	13-4424	
14	1	Guide Wear Ring	53-0621	
15	1	Scraper Ring	53-0648	
16	1	Guide Cylinder Assembly, 3” x 128” Stroke	C1-0125	
17	1	Clevis Pin, 3/4” Dia. x 3” Lg.	13-1985	
18	4	Bolt, Hex, 5/8-11 NC X 1-1/2” Lg., ZP	13-1369	
19	2	Bolt, Hex, 3/8-16 NC x 1-1/2” Lg., ZP	13-0843	
20	4	Screw, Flat Head Cap, 1/4-20 x 1” Lg., ZP	13-4452	
21	8	Screw, Button Head Cap, 1/4-20 x 3/4” Lg., ZP	13-2776	
22	6	Screw, Button Head Cap, 1/4-20 x 1/2” Lg., ZP	13-4454	
23	2	Nut, Clip-on, 1/4-20 NC	13-4421	
24	1	Washer, Flat, 1”, SAE, ZP	13-2030	
25	1	Washer, Flat, 3/4”, SAE, ZP	13-0649	
26	4	Washer, Flat, 3/8”, SAE, ZP	13-0203	
27	4	Washer, Flat, 1/4”, SAE, ZP	13-4456	
28	4	Washer, Lock, 5/8”, ZP	13-0657	
29	2	Nut, Hex, Nylock, 1/4-20 NC, ZP	13-0270	
30	2	Nut, Hex, Nylock, 3/8-16 NC, ZP	13-0707	
31	1	Cotter Pin for Item #17 (1/8” X 1-1/2” Lg.)	13-0397	
32	1	Nut, Hex, Nylock, 1-8 NC, ZP	13-4407	
33	15	Bolt, Anchor, 5/8-11 NC x 5” Lg.	13-0779	
34	2	Strap, Conduit Anchor (Not shown)	C/F	

Cylinder Assemblies

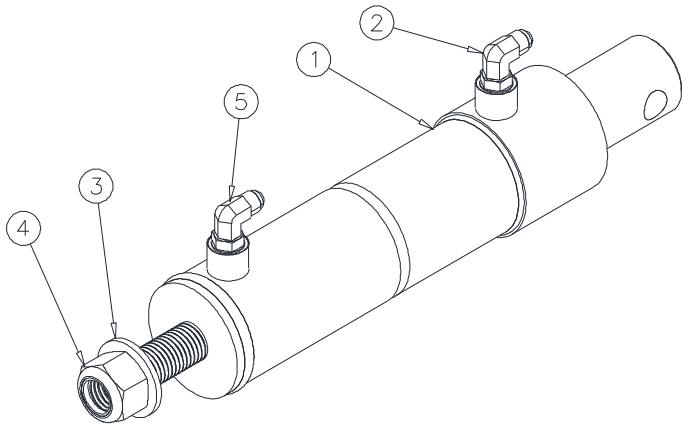

Item	Qty.	Main Cylinder	P/N	Note
1	1	2-1/2” Bore, 2” Rod, 128” Stroke	C1-0125	
2	2	Fitting, 90°, #06 MORB x #06 MJIC	13-0071	
3	1	Washer, Flat, 1” SAE	13-2030	
4	1	Nut, Hex, Nylock, 1”-8 UNC	13-4407	
5	1	Fitting, 90°, #06 MORB x #08 MJIC	13-3319	

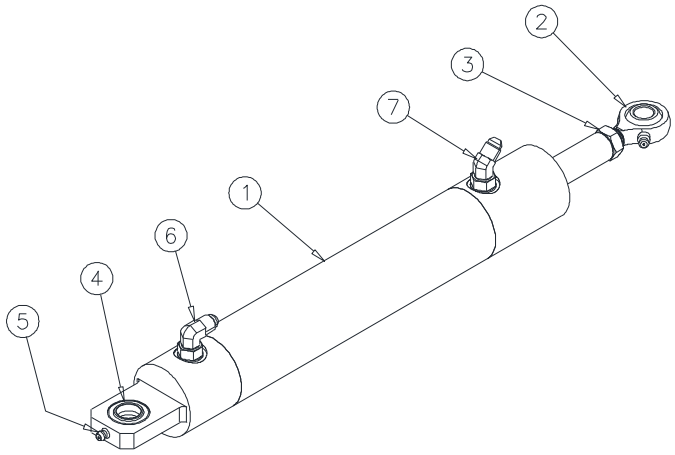

Item	Qty.	Chocking Cylinder	P/N	Note
1	1	1-3/4” Bore, 3/4” Rod, 16” Stroke	C1-0126	
2	1	Rod End, 1/2-20 UNF	13-1273	
3	1	Nut, Hex Jam, 1/2-20 UNF	13-2762	
4	1	Spherical Bearing, 5/8”	13-1848	
5	1	Fitting, Grease, 3/16” Drive-in	13-0655	
6	1	Fitting, 90°, #04 MORB x #04 MJIC	13-0905	
7	1	Fitting, 45°, #04 MORB x #04 MJIC	13-4445	

Hydraulics

Schematic

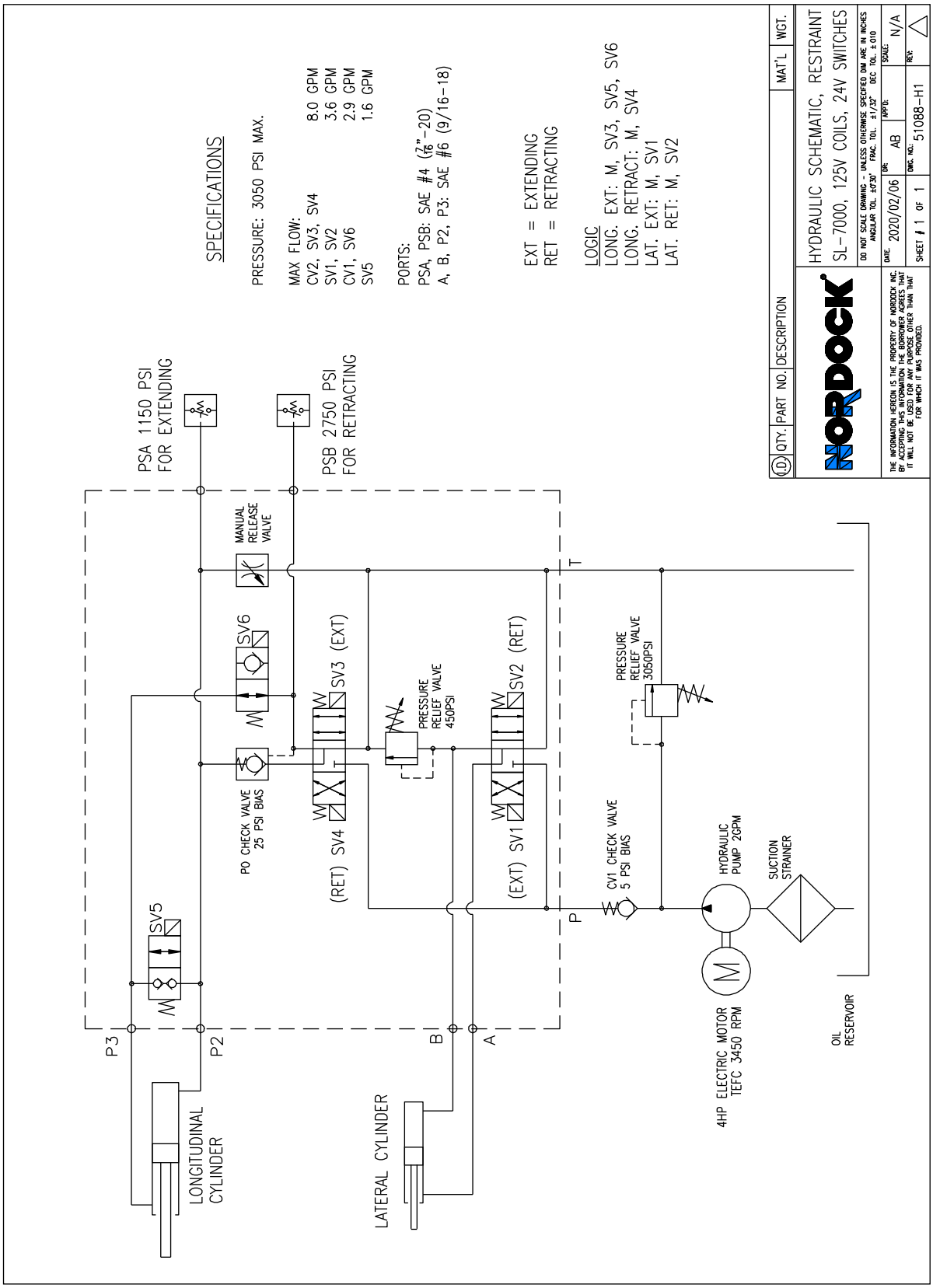

Hydraulic Power Unit



Item	Qty.	Description / Model	P/N	Note
1	1	Hydraulic Power Unit, Complete, 4 HP (400/3/50) 15L	13-4480	

Note: Consult Factory to identify individual parts

Hydraulic Hose Assemblies

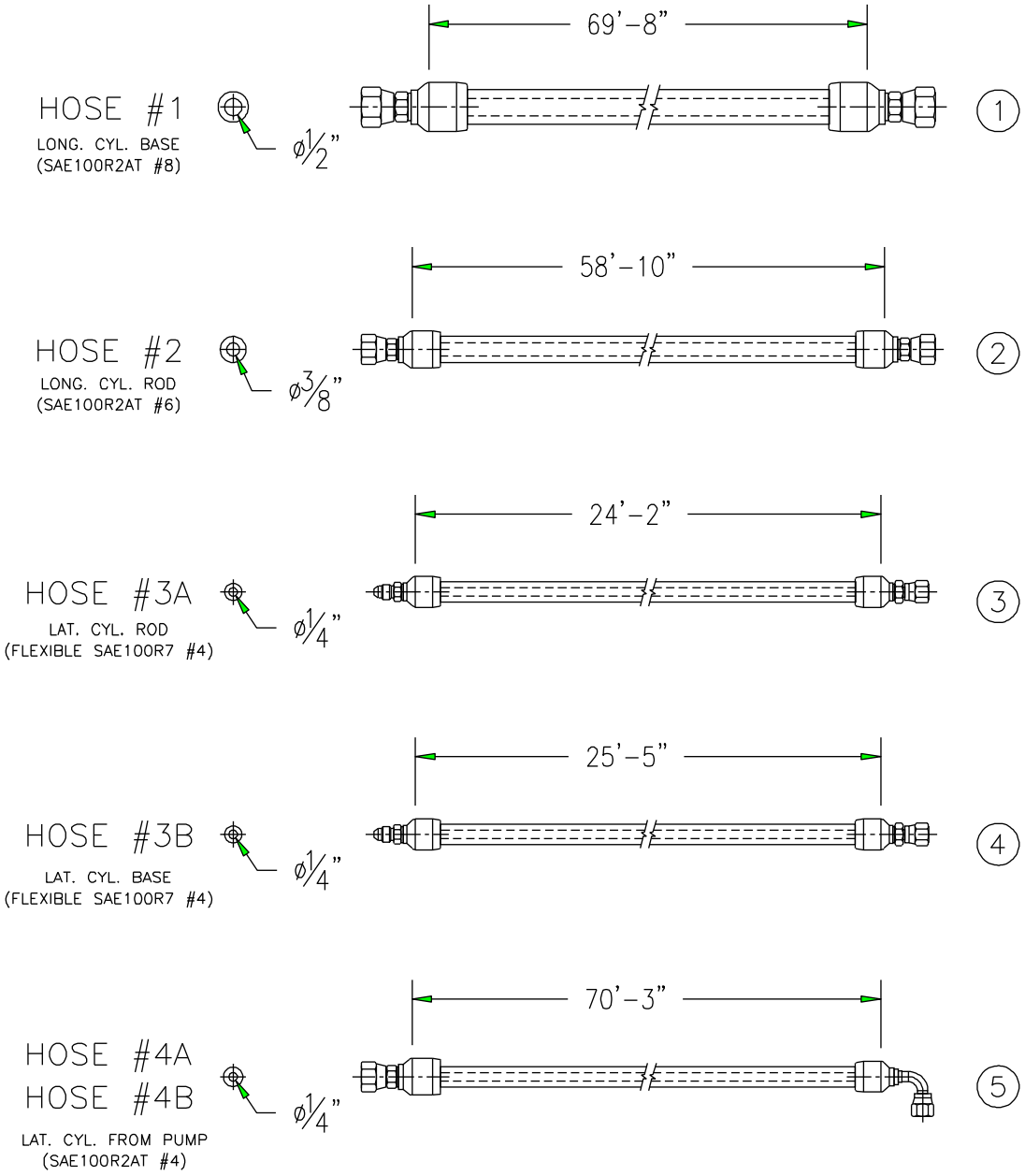

Item	Qty.	Hydraulic Hoses	P/N	Note
1	1	Hose Assembly, 1/2" (08) x 69'-8", SAE 100-R2AT	56131-HS-1	
2	1	Hose Assembly, 3/8" (06) x 58'-10", SAE 100-R2AT	56131-HS-2	
3	1	Hose Assembly, 1/4" (04) x 24'-2", SAE 100-R7	51088-HS1-3A	
4	1	Hose Assembly, 1/4" (04) x 25'-5", SAE 100-R7	51088-HS1-3B	
5	2	Hose Assembly, 1/4" (04) x 70'-3", SAE 100-R2AT	56131-HS-4A 56131-HS-4B	

C/F - Consult Factory

Controls

Control Panel

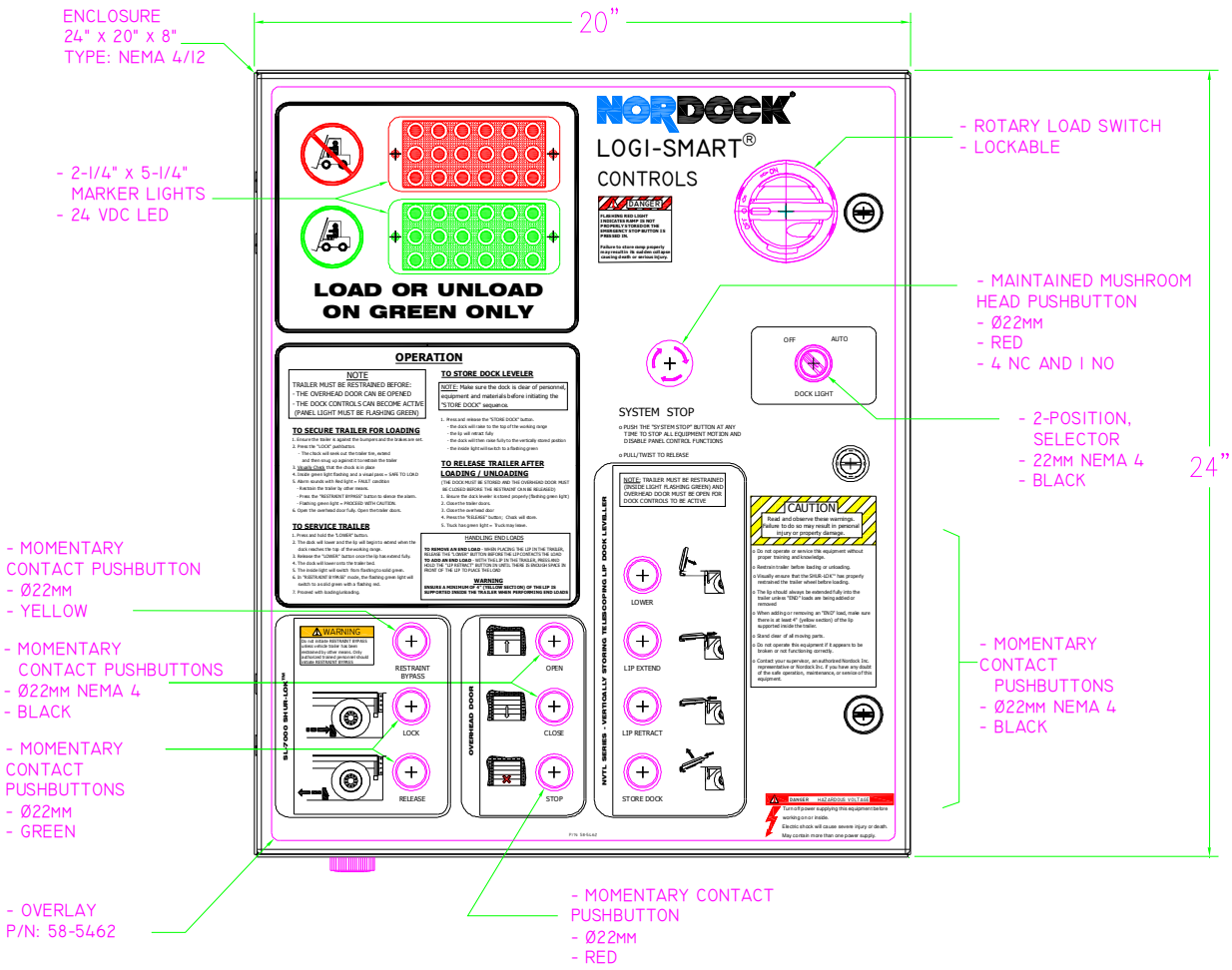

Note: Please consult factory to identify control panel components

DOK-CHOCK™

Advanced Chocking System

Owner's Manual

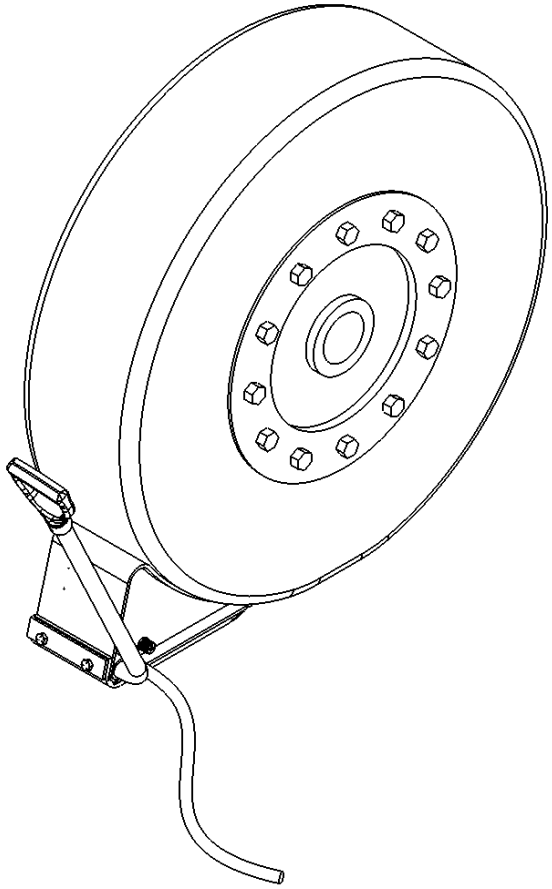

This manual applies only to Dok-Chock™ Systems manufactured beginning April, 2021 with Serial Numbers 54899 and greater.

P/N: 59-0067-B

NORDOCK INC.

Website: nordockinc.com ~ Email: sales@nordockinc.com ~ Toll free: 866-885-4276

Nordock Inc. reserves the right to make changes to specifications without notice or obligation. Nordock products may be covered by various U.S. and foreign patents or pending application.

Parts Replacement

⚠ WARNING

Before servicing the Dok-Chock™, read and follow the safety practices contained in this manual. Failure to follow the guidelines in this manual and those in effect in the workplace can result in serious bodily harm and equipment damage.

The Dok-Chock™ has been designed to minimize the number of serviceable components in order to reduce maintenance requirements and ensure a long service life.

Field serviceable/ replaceable components include:

1. Ultrasonic tire sensor
2. Proximity storage sensor
3. Handle tube and insert
4. D-grip handle
5. Fuses

Any damage sustained by the Aluminum weldment will require its return to the factory for inspection and repair, before it can be re-certified for field usage.

Always replace components with genuine Nordock Inc. replacement parts (refer to assembly diagram and parts list on pages 21 and 22 of this manual).

Assembly Diagram

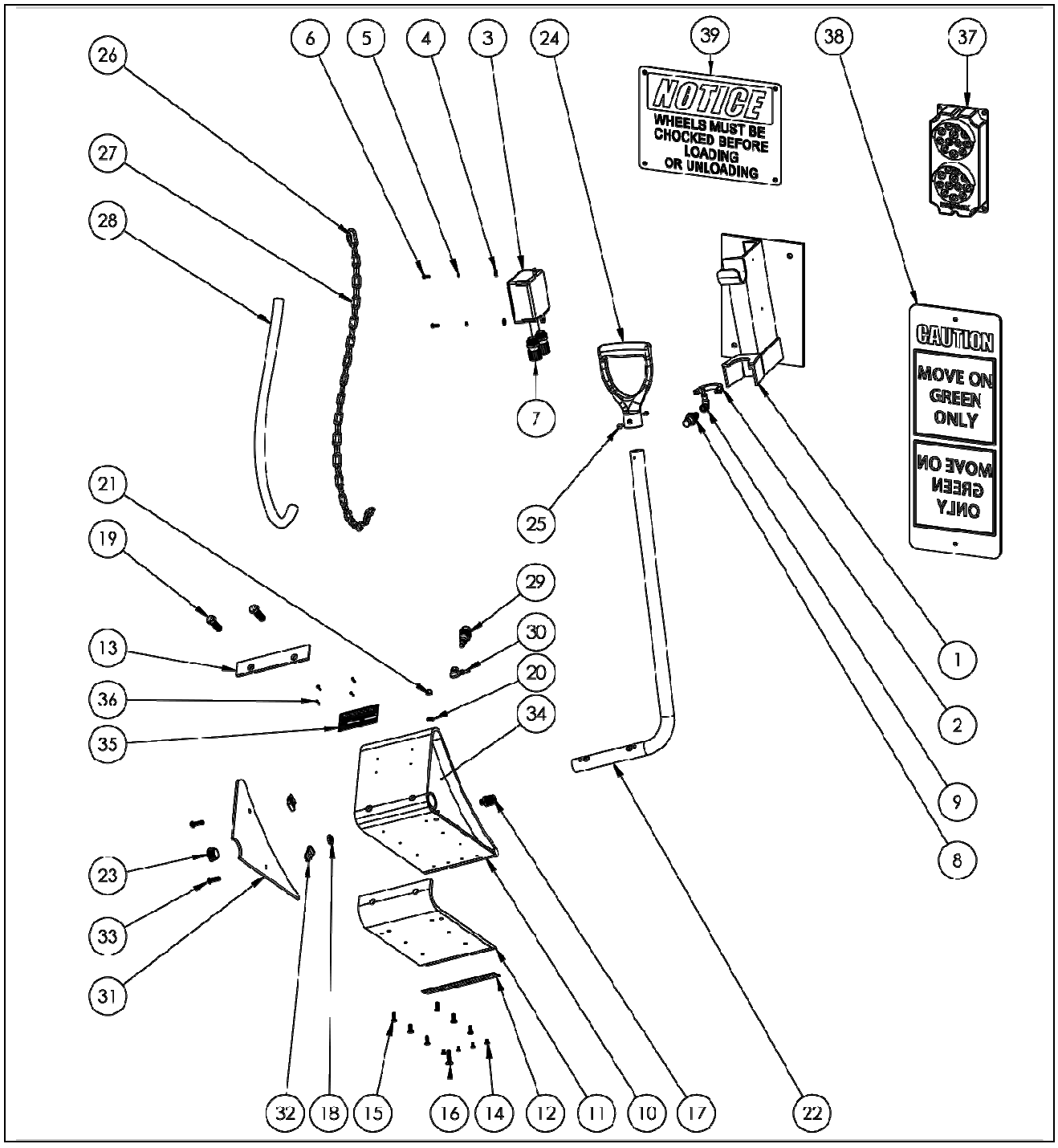

Figure 9: Assembly Diagram

Parts List

ITEM NO.	QTY.	PART NUMBER	DESCRIPTION
1	1	52-2003	Mounting Station Weldment
2	1	13-4257	Rubber Moulding
3	1	13-2145	4 x 4 PVC Junction Box
4	2	13-1956	10-24 Flat Washer
5	2	13-0948	10-24 Lock Washer
6	2	13-0124	10-24 x 1/2" Pan Head Screw
7	2	13-0419	1/2" Strain Relief Connector
8	1	13-3191	Proximity Sensor
9	1	13-3192	Proximity Sensor Connector/Cable
10	1	52-2000	Aluminum Chock Weldment
11	1	53-2023	Neoprene Rubber Sole
12	1	53-2014	Front Rubber Attachment Plate
13	1	53-2015	Back Rubber Attachment Plate
14	4	13-4969	10-24 x 3/8" Flat Head Stainless Steel Screw
15	6	13-4968	1/4"-20 x 3/4" Flat Head Stainless Steel Screw
16	1	13-4970	5/16”-18 x 1&1/4” Flat Head Stainless Steel Screw
17	1	13-4227	1/4" NPT Strain Relief
18	1	13-4228	1/4" NPT Nut
19	2	13-2782	1/2"-13 x 1&1/2" UNC Bolt
20	1	13-4253	5/16" Washer
21	1	13-0846	5/16"-18 Nylock Nut
22	1	52-2001	Handle Weldment
23	1	13-4229	1 1/4" Tubing Plug
24	1	13-4226	D-Grip Handle
25	2	13-4255	3/16" Pop Rivet
26	1	13-0785	3/16" Quick Link
27	1	13-1626-240	20 ft x 3/16" Chain
28	1	53-2024	20 ft Chain/Cable Nylon Sleeve
29	1	13-4224	Ultrasonic Tire Sensor
30	1	13-4302	Ultrasonic Tire Sensor Connector/Cable (10m)
31	1	53-2016	Side Cover
32	2	53-1103	5/16"-18 J-type Nut Retainer
33	2	13-2684	5/16" 18 x 1" Button Head Cap Screw
34	1	13-4252	Warning Label
35	1	13-3471	Serial Number Metal Label
36	4	13-3678	#4 x 3/8” U-Drive Screws for SN Plate
37	1	13-4215	Traffic Light and Buzzer
38	1	23-0124	"Move On Green Only" Sign
39	1	13-3131	"Notice: Wheels must be chocked before loading or unloading" Sign

NORDOCK®



Hydraulic MAST-GUIDE™ Lift Model (MG)

Parts Manual

P/N 47146

This manual **ONLY** applies to mast guide lifts with the following serial number(s): **44468**

NORDOCK INC.
Website: Nordockinc.com ~ Email: Sales@Nordockinc.com ~ Toll free: 866-885-4276
Nordock Inc. reserves the right to make changes to specifications without notice or obligation. Nordock products may be covered by various U.S. and foreign patents or pending applications.

Parts and Service Tables

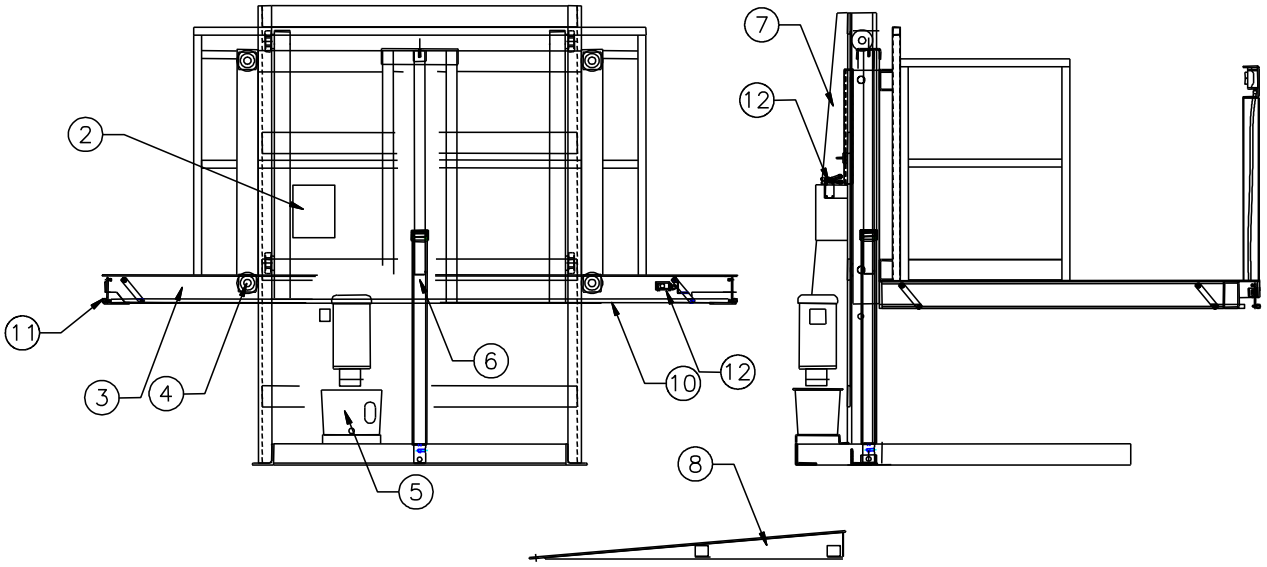

ID	Part No	Description	Qty.
1	32-0250	Lip Assembly – 18” x 66”, Steel	1
2	38-0165	Control Panel	1
3	32-0291	Car Assembly, 72 x 96 – 5K	1
4	13-0670	Mast Bearing, 4”	8
5	13-3469	Hydraulic Power Unit, 3HP, 460/3/60	1
6	C1-0090	Hydraulic Cylinder Assembly	1
7	32-0525	Mast Rail Frame Assembly	1
8	32-0417	Ramp Weldment – 30” x 66”, Steel	1
9	32-0017	Guard Rail Assembly (84”) Stake Pocket	1
10	-	Perimeter Safety Stop Assembly	N/A
11	-	Perimeter Safety Stop Assembly	N/A
12	-	Plunger Limit Switch Assembly	N/A
	32-0034	Pushbutton Control Station	1
	33-0308	Maintenance Pin	2

Hydraulic Power Unit

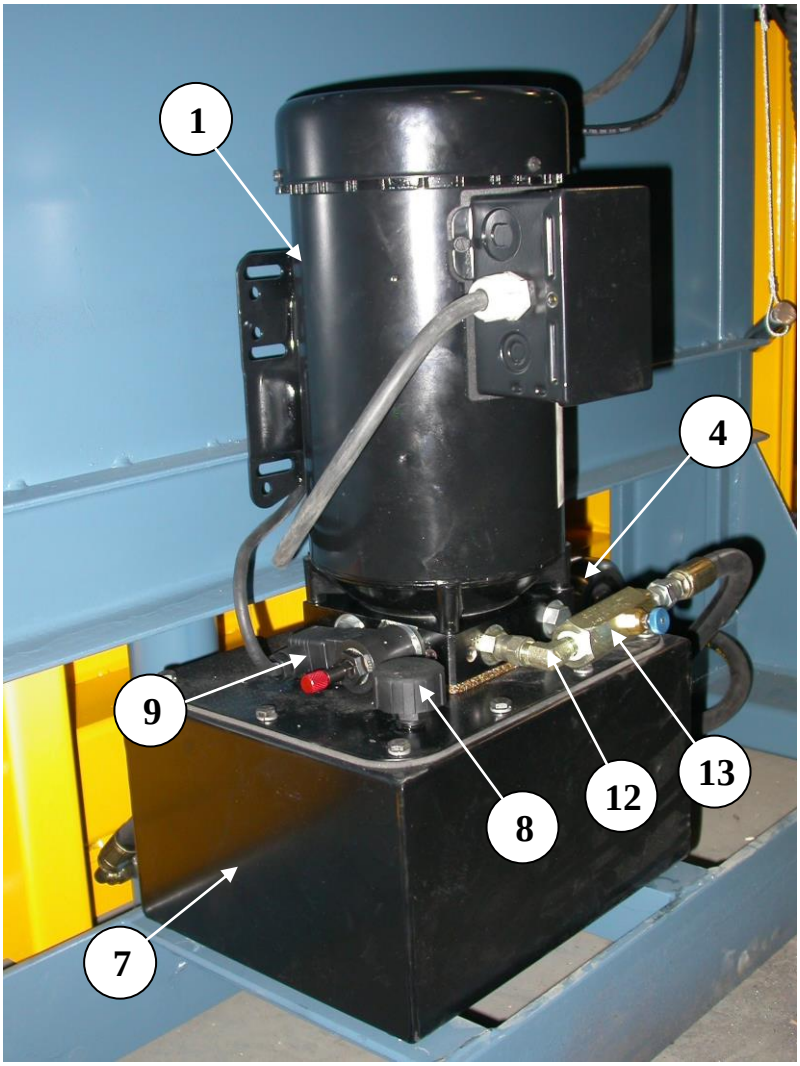

ID	Part No	Description	Qty.
	13-3469	Complete Motor Pump Assembly, except items 13,14,15	1
1	C/F	Motor, 3 HP, 460/3/60, 3450 RPM	1
2	C/F	Pump Bell Housing (inside reservoir)	1
3	C/F	Motor Coupler (inside reservoir)	1
4	C/F	Manifold Assembly	1
5	C/F	Hydraulic Pump, 2 GPM @ 3450 rpm (inside reservoir)	1
6	C/F	Suction Strainer (inside reservoir)	1
7	C/F	Hydraulic Reservoir, 4Gal	1
8	C/F	Filler/Breather Cap	1
9	C/F	Lowering Valve, cartridge	1
10	C/F	Solenoid Coil, 24VAC	1
11	C/F	Fitting, metric - #6 JIC	1
12	13-0742	Fitting, 90deg, #6 JIC female – 1/4NPT	1
13	13-0358	Flow Control	1
14	13-0100	Fitting, 1/4 NPT - #6 JIC male	1

NORDOCK®



Safety Gate
Model (ASG)

Parts Manual

This manual applies to safety gates manufactured for Sales Order SO56717, April 2021, with Serial numbers 55350 - 55352

P/N: 56717-OM

NORDOCK INC.

Website: Nordockinc.com ~ Email: Sales@Nordockinc.com ~ Toll free: 866-885-4276

Nordock Inc. reserves the right to make changes to specifications without notice or obligation. Nordock products may be covered by various U.S. and foreign patents or pending applications.

Parts List

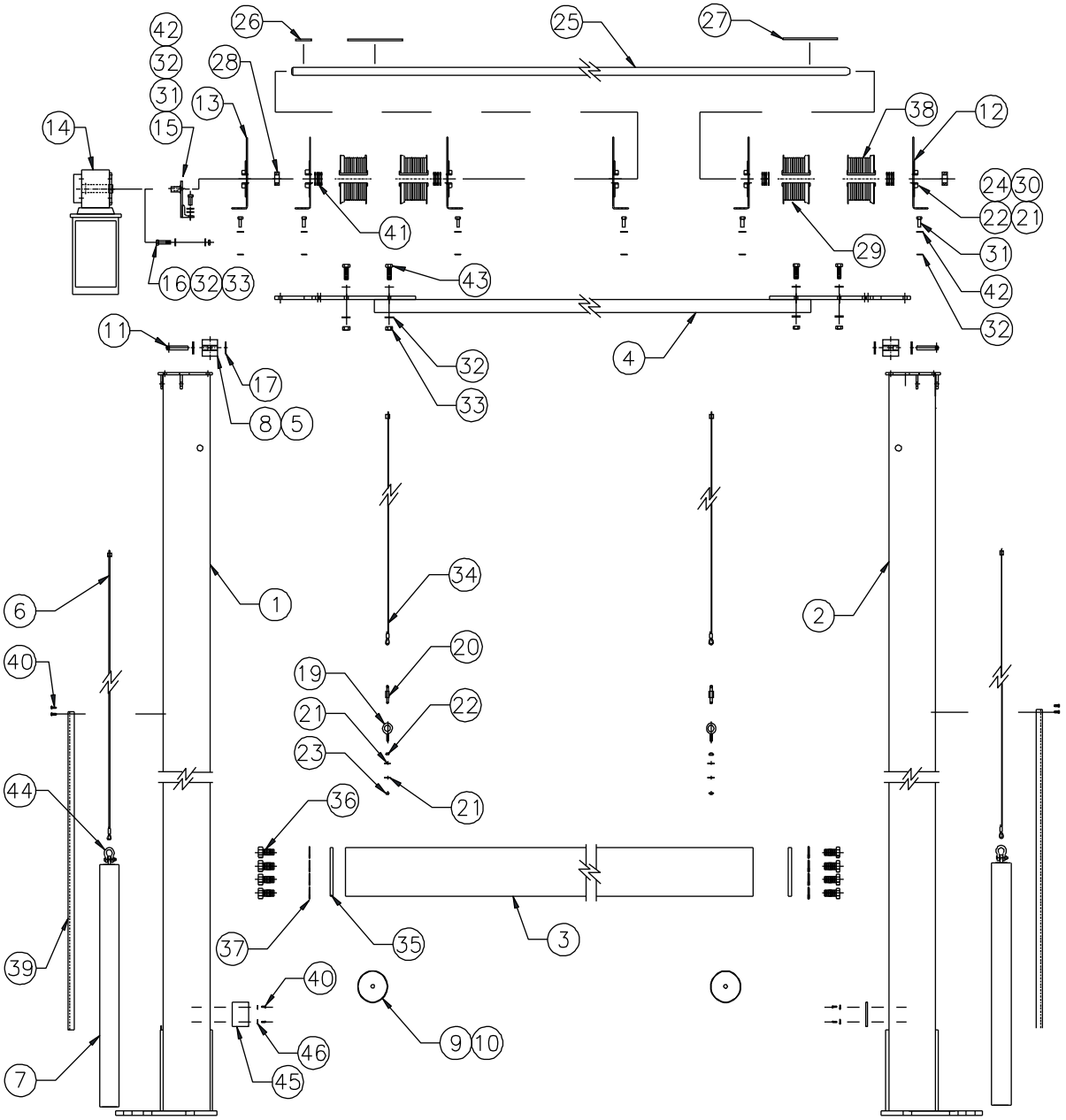

Item	Qty.	Description / Model		P/N	Note
1	1	UPRIGHT COLUMN, LEFT, Special	10’ HIGH	52-0510	
2	1	UPRIGHT COLUMN, RIGHT, Special	10’ HIGH	520513	
3	1	BARRIER ASSEMBLY	10’ WIDE	52-0519	
4	1	SPREADER CHANNEL, SPECIAL	10’ WIDE	52-0546	
5	2	ROLLER, CABLE COUNTERWEIGHT		53-0516	
6	2	CABLE ASSEMBLY, COUNTERWEIGHT	10’(120”) x 10’(120”)	52-0531-10-10	
		Gate Width & Height must be specified when ordering			
7	2	COUNTERWEIGHT	120” WIDE	52-0532	
		Gate Width & Height must be specified when ordering			

Item	Qty.	Description / Model		P/N	Note
8	4	BUSHING, OILITE, 1/2"ID x 5/8"OD x 1"LG.		13-0434	
9	2	SHOCK ABSORBER		13-0743	
10	2	NUT		(c/w 9)	
11	2	PIN ASSEMBLY, COUNTERWEIGHT PULLEY		52-0526	
12	3	SHAFT PIVOT BRACKET, LEFT		13-0892-L	
13	3	SHAFT PIVOT BRACKET, RIGHT		13-0892-R	
14	1	DOOR OPERATOR c/w TORQUE ARM, 110V/1/60		13-4127	
15	1	TORQUE ARM MOUNTING BRACKET		52-0540	
16	1	BOLT, HEX, 3/8"-16 x 2-1/2", ZP		13-2864	
17	2	FLATWASHER, 1/2" STD, ZP		13-0267	
18					
19	2	EYEBOLT, ¼"-20		13-0753	
20	2	QUICK LINK		13-0754	
21	28	FLATWASHER, 1/4" STD, ZP		13-0272	
22	14	NUT, HEX, 1/4", ZP		13-0334	
23	2	NUT, 1/4"-20, NYLOCK, ZP		13-0270	
24	12	BOLT, HEX, 1/4"-20 x 3/4", ZP		13-0888	
25	1	TORQUE SHAFT	120" WIDE	53-0565	
26	1	KEY, 1/4" x 1/4" x 2-3/8"		13-0752	
27	2	KEY, 1/4" x 1/4" x 6-1/2"		13-0752	
28	2	COLLAR		13-0751	
29	2	CABLE DRUM, LEFT		13-0889	
30	6	SHAFT PIVOT BEARING		13-0891	
31	16	BOLT, HEX, 3/8" x 1", ZP		13-0887	
32	29	FLATWASHER, 3/8", SAE, ZP		13-0203	
33	11	NUT, 3/8", NYLOCK, ZP		13-0707	
34	2	CABLE ASSEMBLY, BARRIER	10' HIGH	52-0530-10	
		Gate Height must be specified when ordering			
35	2	GATE END PLATE, BARRIER		53-0536	
36	8	BOLT, HEX, 3/4"-10 x 1-1/2", ZP		13-0648	
37	8	FLATWASHER, 3/4", SAE, ZP		13-0649	
38	2	CABLE DRUM, RIGHT		13-0890	
39	2	COUNTERWEIGHT ACCESS PANEL	10' HIGH	53-0510	
40	8	MACHINE SCREW, 10-24 x 1/2", ZP		13-0124	
41	A/R	DRUM SPACER		13-2094	
42	14	LOCKWASHER, 3/8" PLATED		13-1061	
43	16	BOLT, HEX, 3/8" x 1-1/2", ZP		13-0888	
44	2	SHACKLE, 1/4" (counterweight to cable)		13-0540	
45	1	PHOTO EYE, REFLEX c/w BRACKET, REFLECTOR		13-4144	
46	4	WASHER, LOCK, #10		13-0948	
47	10	ANCHOR, 1" x 6", Wedge Type		13-1733	